CBWP
Control Box for 4” Submersible Motors

ELECTRICAL WIRING FOR CONTROL BOXES OF 0.5 - 1 HP IN 230V

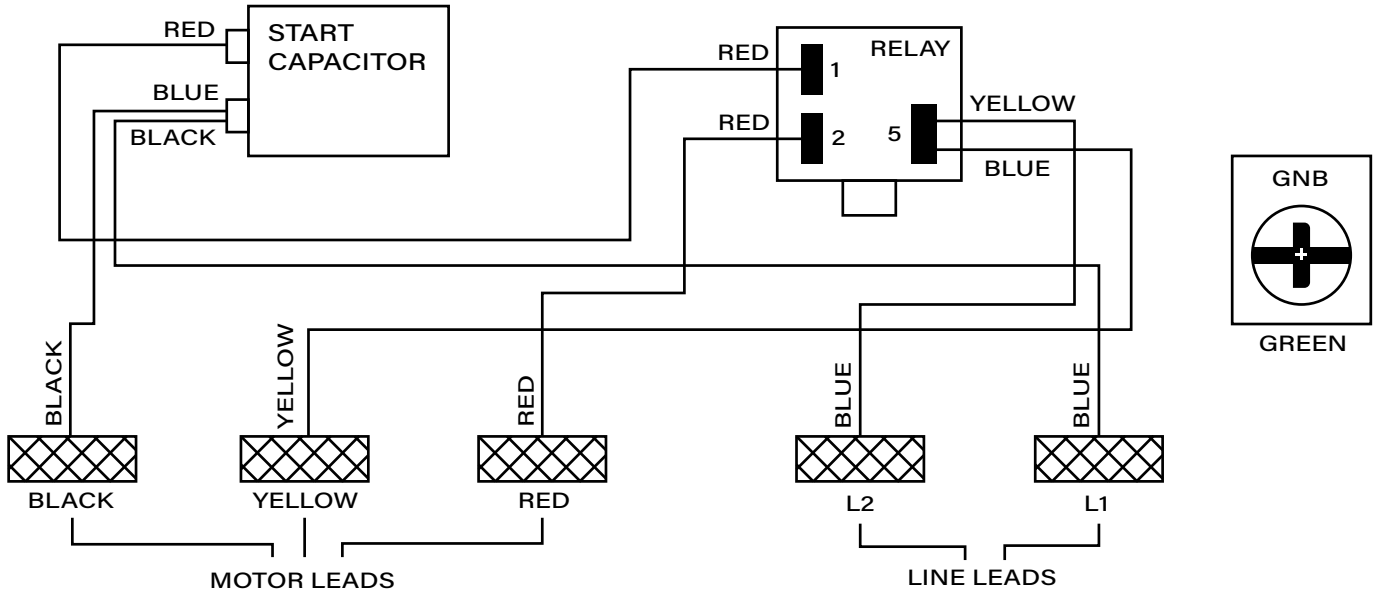

MODEL	HP	VOLT.	STARTING CAPACITOR	DESCRIPTION	RUNNING CAPACITOR	DESCRIPTION	RELAY	DESCRIPTION	OVERLOAD PROTECTOR	DESCRIPTION
CBWP 05C16S	0.5	230 V	MP1071A0M001	2UT 59-71MFD250VAC(Q40*80)	N/A	N/A	MS10007	HLR3800-4AH3L(60HZ) VDE	N/A	N/A
CBWP 07C16S	0.75	230 V	MP1103A0M001	2UT 86-103MFD250VAC(Q40*80)	N/A	N/A	MS10010	HLE3800-2AE3L(60HZ) VDE	N/A	N/A
CBWP 10C16S	1	230 V	MP1126A0M001	2UT 105-126MFD250VAC(Q40*80)	N/A	N/A	MS10010	HLE3800-2AE3L(60HZ) VDE	N/A	N/A

PD WATER SYSTEMS LLC
2310 W. 76TH ST. HIALEAH, FL 33016. TEL: (954) 474 9090
www.pearlwatersystems.com