CBWP
Control Box for 4” Submersible Motors

ELECTRICAL WIRING FOR CONTROL BOXES OF 1.5 - 5 HP IN 230V

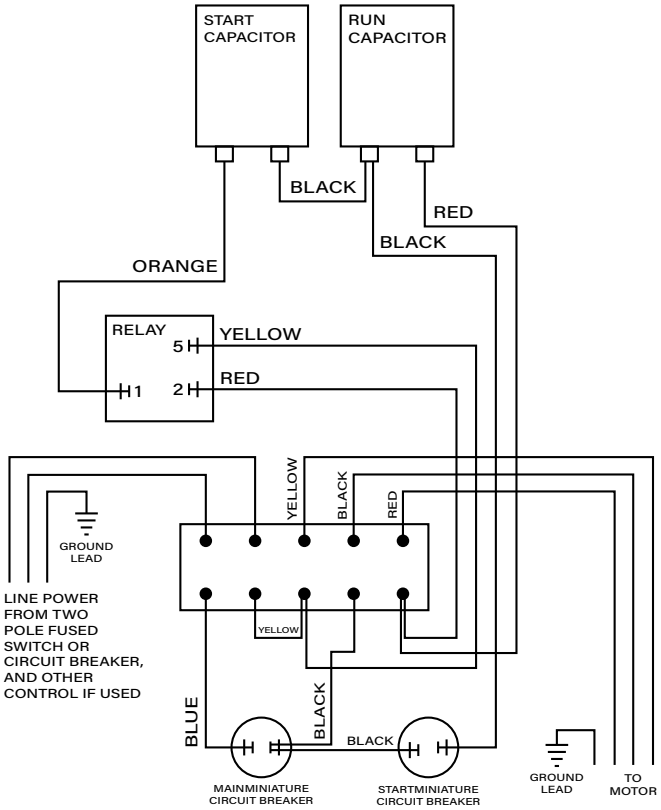

MODEL	HP	VOLT-AGE	STARTING CAPACITOR	DESCRIPTION	RUNNING CAPACITOR	DESCRIPTION	RELAY	DESCRIPTION	OVERLOAD PROTECTOR	DESCRIPTION
CBWP 15C16S	1.5	230 V	MP1126A0M001	2UT 105-126MFD250VAC(Q40*80)	MP2010A0U004	RW+2UT 10UF 400V(Q40*60)	MS10010	HLE3800-2AE3L(60HZ) VDE	MN0401301	88 13A 125/250VAC
CBWP 20C16S	2	230 V	MP1126A0M001	2UT 105-126MFD250VAC(Q40*80)	MP2020A0U004	RA+2UT 20UF 400VAC	MS10010	HLE3800-2AE3L(60HZ) VDE	MN0501501	88 15A 125/250VAC
CBWP 30C16S	3	230 V	MP1250A0M002	2UT 208-250MFD250VAC(Q40*80)	MP2045A0U005	RW+2UT 45UF 400VAC(Q52*90)	MS10010	HLE3800-2AE3L(60HZ) VDE	MN0301901	19A 125/250VAC
CBWP 50C16S	5	230 V	MP1324A0M001	2UT 270-324MFD250VAC(Q46*106)	MP2080A0U007	RW+2UT 80UF 400V(Q60*125)	MS10010	HLE3800-2AE3L(60HZ) VDE	MN0503001	98 30A 125/250VAC

PD WATER SYSTEMS LLC
2310 W. 76TH ST. HIALEAH, FL 33016. TEL: (954) 474 9090
www.pearlwatersystems.com