CBWP
Control Box for 4” Submersible Motors

ELECTRICAL WIRING FOR DELUXE CONTROL BOXES OF 3 HP IN 230V

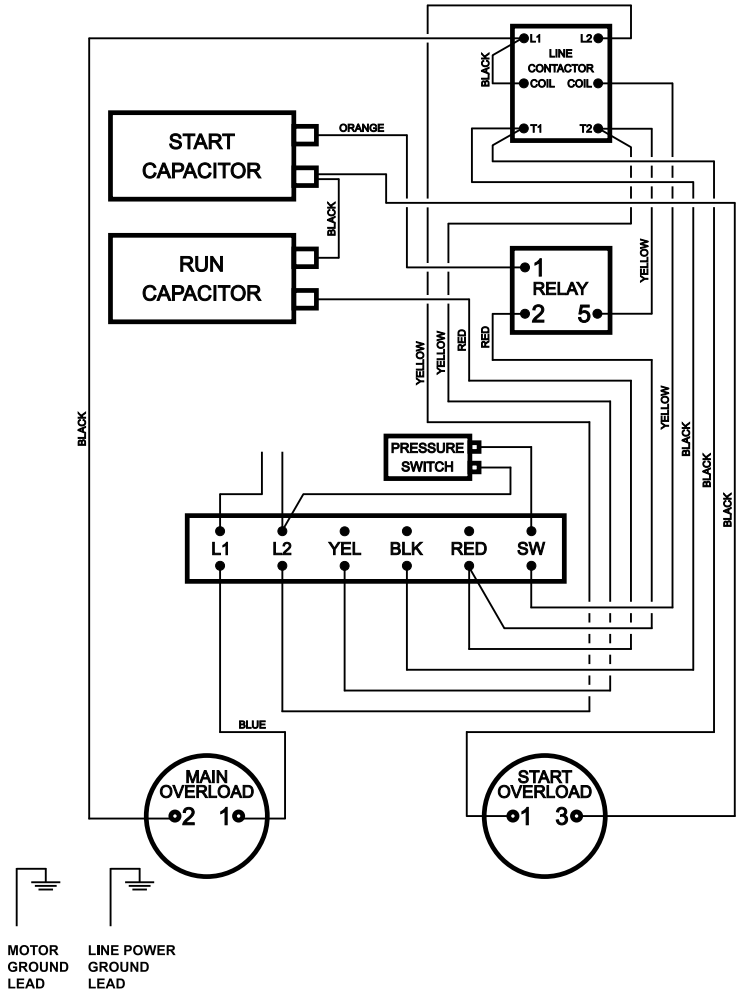

MODEL	HP	VOLT.	STARTING CAPACITOR	DESCRIPTION	RUNNING CAPACITOR	DESCRIPTION	RELAY	DESCRIPTION	OVERLOAD PROTECTOR	DESCRIPTION
CBWP 30C16D	3	230 V	SP00007820	208-250 MF 250V -UL	SP00007819	45 MF 370V-UL	SP00006970	RVAH 3AL3L	N/A	N/A

PD WATER SYSTEMS LLC
2310 W. 76TH ST. HIALEAH, FL 33016. TEL: (954) 474 9090
www.pearlwatersystems.com