# CBWP
## Control Box for 4” Submersible Motors

## ELECTRICAL WIRING FOR DELUXE CONTROL BOXES OF 5 HP IN 230V

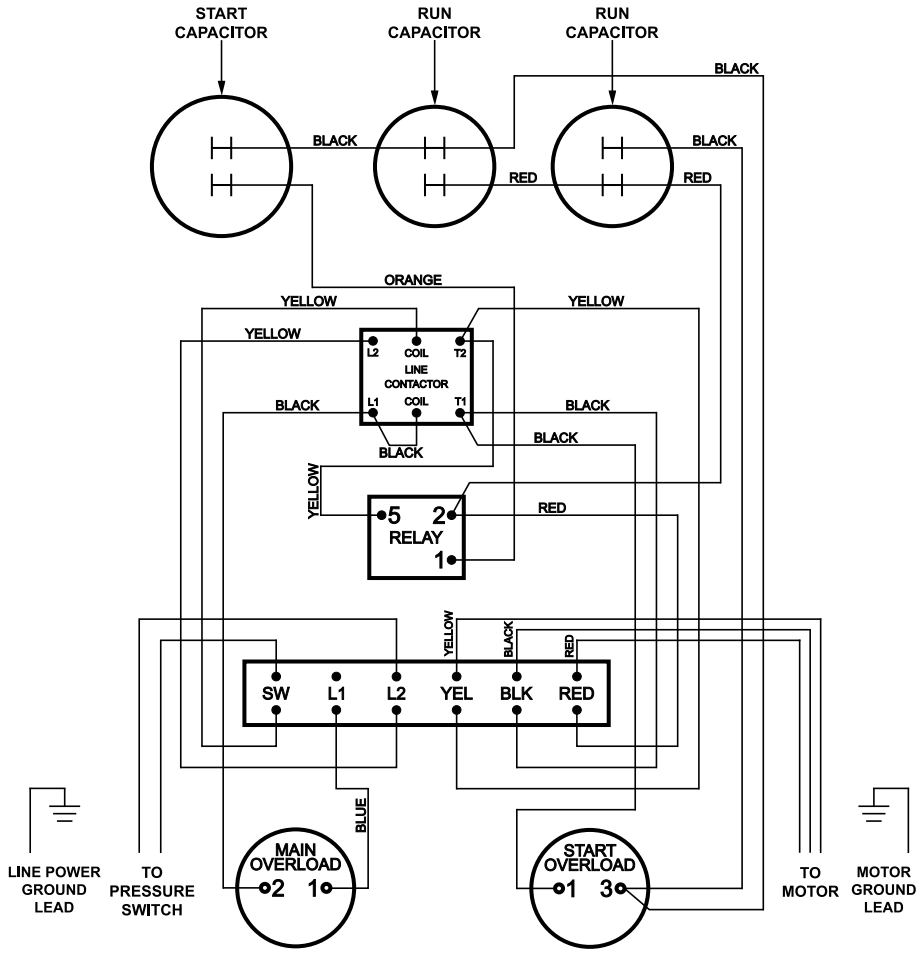


| MODEL | HP | VOLT. | STARTING CAPACITOR | DESCRIPTION | RUNNING CAPACITOR | DESCRIPTION | RELAY | DESCRIPTION | OVERLOAD PROTECTOR | DESCRIPTION |
|---|---|---|---|---|---|---|---|---|---|---|
| CBWP 50C16D | 5 | 230 V | SP00007792 | 270-324 MF 330V -UL | R00012075 | 40 MF 370V-UL MET.CASE DF | SP00006970 | RVAH 3AL3L | N/A | N/A |


PD WATER SYSTEMS LLC
2310 W. 76TH ST. HIALEAH, FL 33016. TEL: (954) 474 9090
www.pearlwatersystems.com