# CBWP
## Control Box for 6” Submersible Motors

## ELECTRICAL WIRING FOR CONTROL BOXES OF 10 HP IN 230V

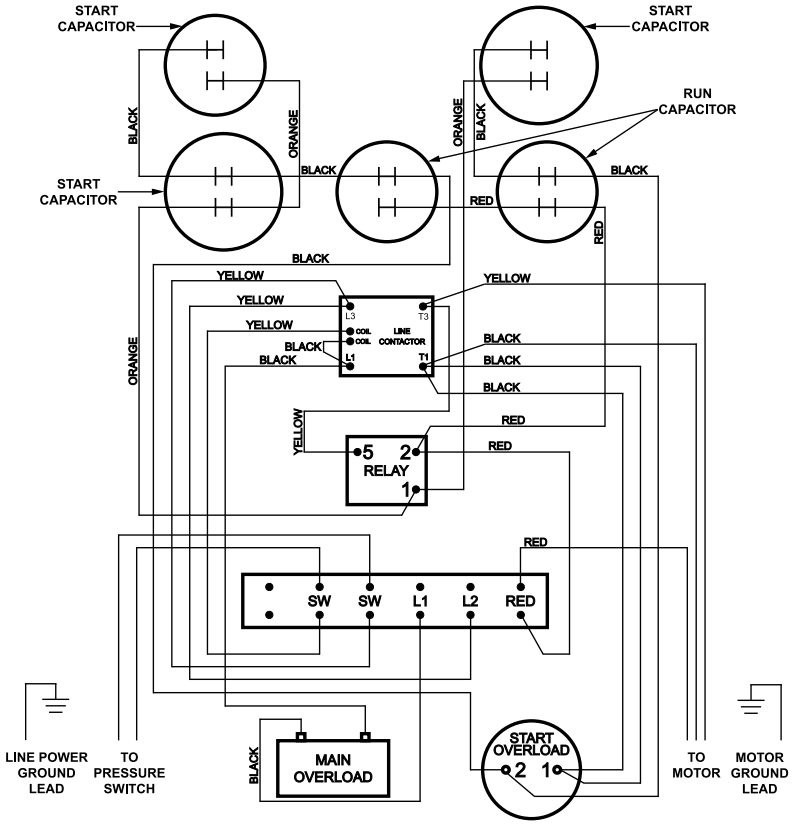


| MODEL | HP | STARTING CAPACITOR | | | RUNNING CAPACITOR | | | RELAY | |
|---|---|---|---|---|---|---|---|---|---|
| | | PART # | QTY. | DESCRIPTION | PART # | QTY. | DESCRIPTION | PART # | DESCRIPTION |
| CBWP 100C16S | 10 | SP00007792 | 1 | 70-324 MF 330V -UL | SP00007797 | 2 | 35 MF 370V-UL MET.CASE DF | SP00006970 | RVAH 3AL3L |
| | | SP00007793 | 1 | 216-260 MF 330V -UL | | | | | |
| | | SP00007796 | 1 | 130-156 MF 330V -UL | | | | | |


PD WATER SYSTEMS LLC
2310 W. 76TH ST. HIALEAH, FL 33016. TEL: (954) 474 9090
www.pearlwatersystems.com