CBWP
Control Box for 6” Submersible Motors

ELECTRICAL WIRING FOR CONTROL BOXES OF 7.5 HP IN 230V

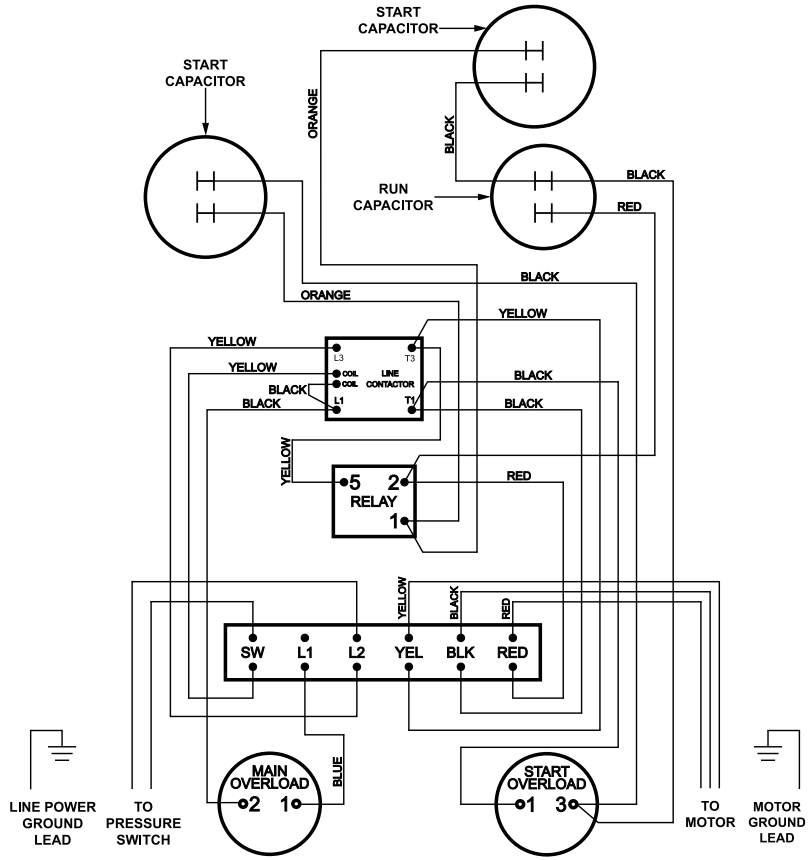

MODEL	HP	STARTING CAPACITOR			RUNNING CAPACITOR			RELAY	
		PART #	QTY.	DESCRIPTION	PART #	QTY.	DESCRIPTION	PART #	DESCRIPTION
CBWP 75C16S	7.5	SP00007792	1	270-324 MF 330V -UL	SP00007819	1	45 MF 370V-UL	SP00006970	RVAH 3AL3L
		SP00007793	1	216-260 MF 330V -UL					

PD WATER SYSTEMS LLC
2310 W. 76TH ST. HIALEAH, FL 33016. TEL: (954) 474 9090
www.pearlwatersystems.com