VPC-VPS 3

Vertical Pumps
NEMA MOTOR



POS.	PARTS NAME
11	Discharge part
12	Chamber, upper
+24	Neck ring
+25	Neck ring retainer
13	Chamber, middle with bearing ring
+24	Neck ring
+25	Neck ring retainer
14	Bearing ring
18	Impeller
27	Clamp
28	Chamber, botton
+24	Neck ring
+25	Neck ring retainer
36	Pump head 0.5~0.75HP
	Pump head 1~1.5HP
	Pump head 2~3HP
	Pump head 4~5.5HP
37	Pump shaft
38	Shaft ring
39	Shaft bushing
40	Lock nut
42	Spacing pipe (17.5mm)
42A	Spacing pipe A (4.5mm)
43	Coupling Assembly (ψ14) 0.5~0.75HP
	Coupling Assembly (ψ19) 1~1.5Hp
	Coupling Assembly (ψ24) 2~3HP
	Coupling Assembly (ψ28) 4~5.5Hp
+72	Shaft pin
+73	Hexagon socket head screw
	Hexagon socket head screw
48	Pump sleeve
54	Coupling guard (0.5~1.5HP)
	Coupling guard (2~7.5HP)
56	Pump head cover
57	Shaft seal
+66	O-ring (EPDM)
	O-ring (Viton)
59	Base (Flange)
	Base (Victaulic)
61	Flange
62	Base plate (Flange)
62	Base plate (Victaulic)
63	Drain plug
64	Air vent screw
65	Plug
69	Hexagon socket head screw
74	Screw M6*20L (0.5~0.75HP)
	Screw M6*25L (1~1.5HP)
	Screw M8*25L (2~3HP)
	Screw M8*25L (4~5.5HP)
75	Screw
76	O-ring
77	Nut
78	Washer
80	Spring
81	Staybolt
82	O-ring (EPDM)
	O-ring (Viton)
86	Retaining ring

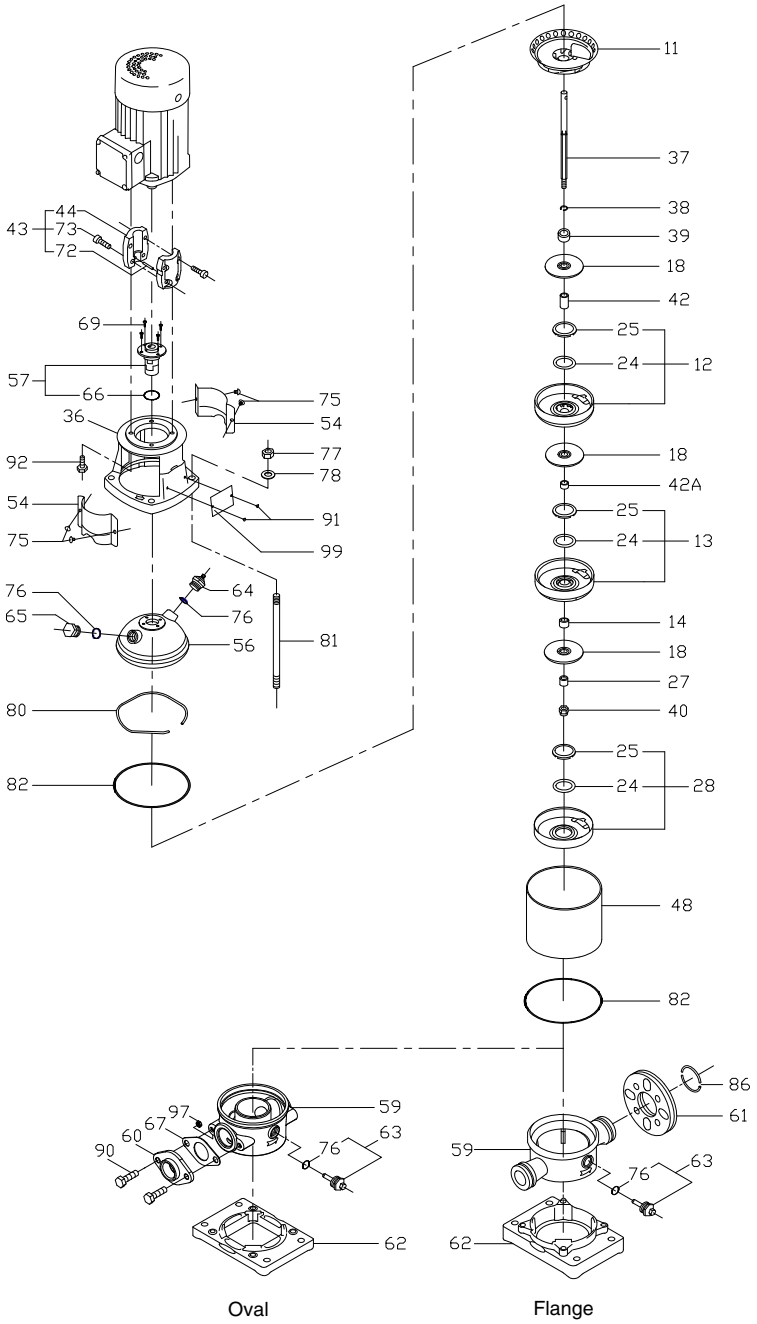

Oval Flange