C2SPET

SS END SUCTION CENTRIFUGAL PUMPS

C2SPET is an end-suction centrifugal pump. The water pump was designed taking into consideration the features needed to guarantee complete customer satisfaction, including:

- Close coupled design – saves space; simplifies maintenance and installation
- Stainless steel liquid end components – high quality; corrosion resistance
- Versatile mounting – can be installed horizontally or vertically
- Back pullout construction – allows for assembly and overhaul of the impeller and seal without distorting suction and discharge connections
- Top centerline discharge and foot support under casing – ensures self-venting and reduces misalignment from pipe loads
- High-efficiency – lowers operating costs
- High quality mechanical shaft seals and o-rings – available for standard pumping requirements, or optional high temperature and chemical duty operation
- Available as a complete pump or as a kit



Applications

- Pressure Boosting
- Plant Services
- Water Supply Systems
- Liquid Transfer
- Reverse Osmosis
- Ultrapure Water Systems
- Water Treatment
- Irrigation
- Air Conditioning Systems

Operating Conditions

- Suction Size: 1 1/4" NPT Thread
- Discharge Size: 1" NPT Thread
- Power Range: 1.5 hp
- Capacity: 20 - 45 gpm
- Head: Up to 150 feet
- Liquid: Clean Water

Pump Construction

- Suction Size: 1 1/4" to 1 1/4" NPT Thread
- Discharge Size: 1" NPT Thread
- Power Range: 1/2 to 3 hp
- Capacity: 5 to 52 gpm
- Head: 3 to 220 feet
- Liquid: Clean Water

Motor

- 1.5 HP
- 56J frame
- Available in ODP or TEFC construction
- Strong steel frame
- Cast aluminum end plates with steel bearing seat inserts for mechanical reliability
- Automatic thermal overload protection
- Corrosion resistant stainless steel shaft extension
- Optimized airflow design providing higher horsepower in a smaller package

C2SPET40 30
SS END SUCTION CENTRIFUGAL PUMPS

Performance curves

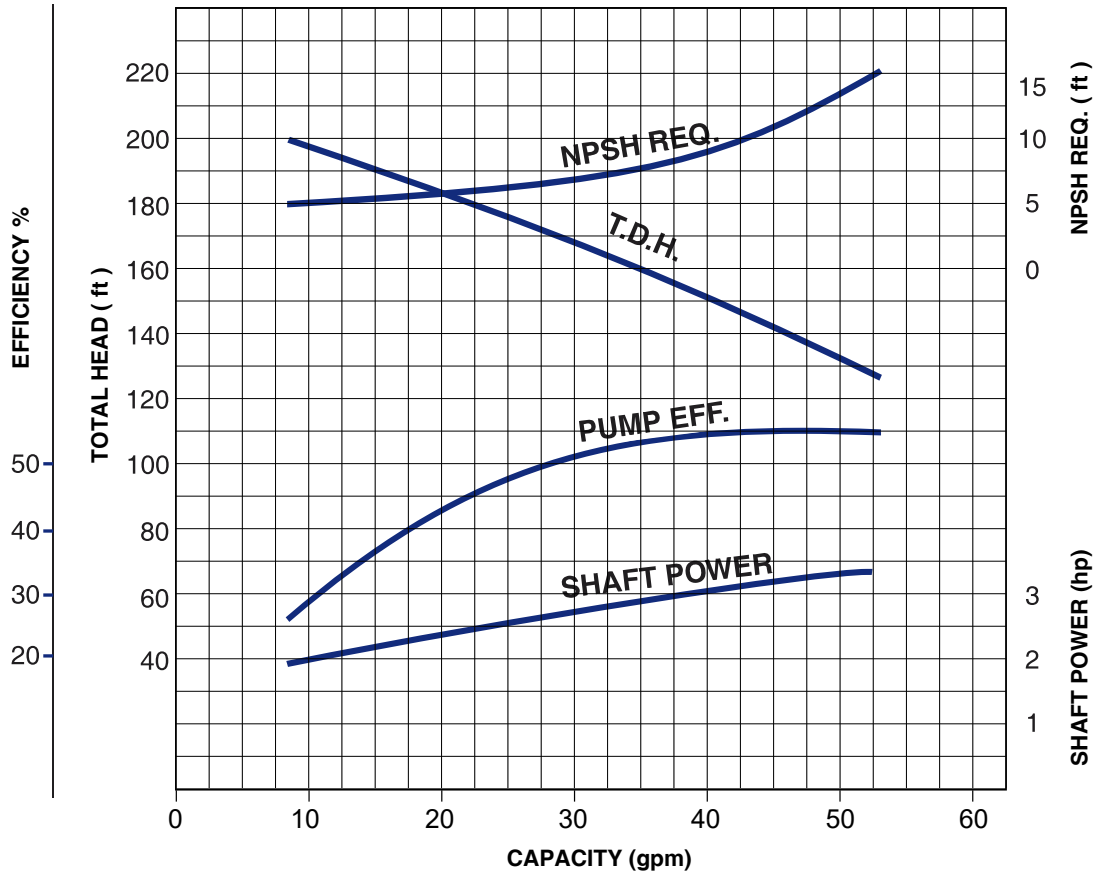

C2SPET40 30 - Threaded Ports - TEFC Motor

MODEL	HP	MOTOR	VOLT	PHASE	MAX. AMP	SUCT.	DISCH.	WEIGHT [lbs]
C2SPET40 30H36BTS	3	MVB 30H36T-056JS	230/460	3	7.2 / 3.6	1 1/4"	1"	65

C2SPET40 30 - Threaded Ports - ODP Motor

MODEL	HP	MOTOR	VOLT	PHASE	MAX. AMP	SUCT.	DISCH.	WEIGHT [lbs]
C2SPET40 30C16BOS	3	MVB 30C16O-056JS	230	1	13	1 1/4"	1"	65
C2SPET40 30H36BOS	3	MVB 30H36O-056JS	230/460	3	8.0 / 4.0	1 1/4"	1"	55

C2SPET40 30
SS END SUCTION CENTRIFUGAL PUMPS

Dimensions

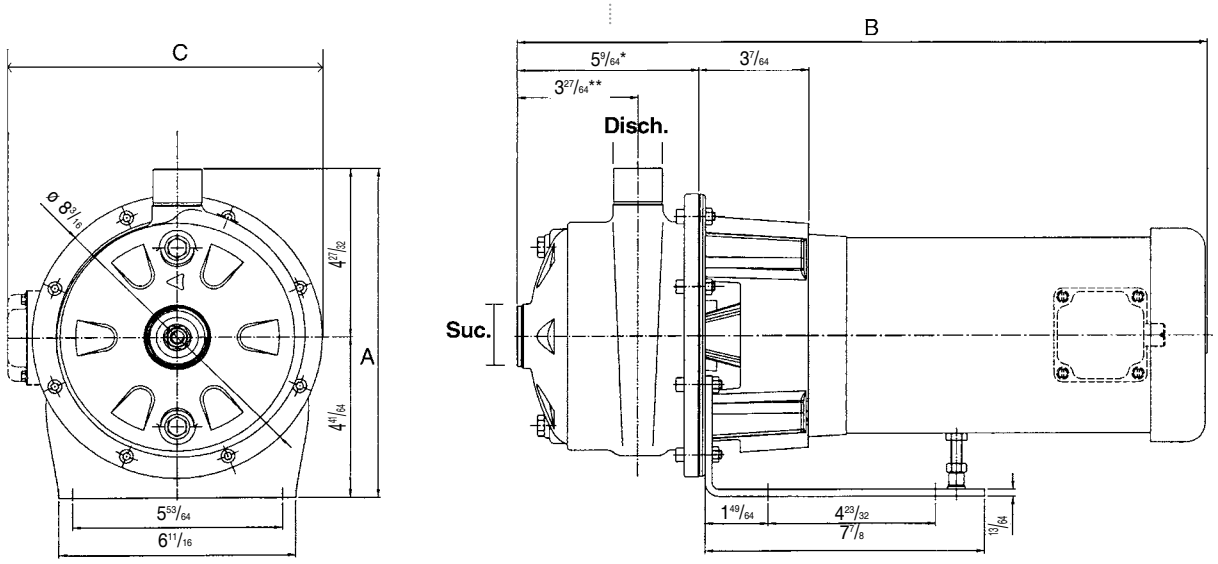

MODEL	SIZE	PUMP SIZE - NPT (IN)		DIMENSION (IN)		UNIT WEIGHT (LBS.)			
		SUCTION	DISCHARGE	A	B	SINGLE PHASE		THREE PHASE	
						ODP	TEFC	ODP	TEFC
C2SPET40 30	1 1/4	1	10.82		11.66	65	90	55	65