CSPEF

END SUCTION CENTRIFUGAL WATER PUMP

CSPEF is an end-suction centrifugal pump. The water pump was designed taking into consideration the features needed to guarantee complete customer satisfaction, including:

- **Stainless steel end components.** High quality, and corrosion resistance.
- **Versatile mounting.** It can be installed horizontally or vertically.
- **Back pullout construction.** It allows for assemblyand overhaul of the impeller and seal withoutdistorting suction and discharge connections.
- **Top centerline discharge and foot support under casing.** It ensures self-venting and reduces misalignment from pipe loads.
- **High efficiency.** It lowers operating costs.
- **High quality mechanical shaft seals and o-rings.** Available for standard pumping requirements, or optional high temperature and chemical duty operation.
- Available as a complete pump or as a kit.

Applications

- Pressure Boosting.
- Plant Services.
- Irrigation.
- Water Supply Systems.
- Liquid Transfer.
- Ultrapure Water Systems.
- Water Reclamation and Treatment.
- Temperature Control.
- Air Conditioning Systems.

Operating Conditions

- Suction size: 2 1/2"".
- Discharge size: 1 1/4".
- Power range: 5 - 15 hp.
- Capacity: 150 gpm.
- Head: 63 - 265ft.
- Liquid: Clean water, Glycol, Dielectric Fluid.



Pump Construction

- Flanged ports.
- 304L Stainless Steel Casing.
- 304L Stainless Steel Impeller (closed type).
- 304L Stainless Steel Shaft Sleeve/Coupling.
- Cast Iron Bracket.
- Type 21 Carbon/ceramic/viton mechanical seal.

Motor

- 5 - 15 hp.
- JM Frame.
- Motor flange and shaft designed to support pump unit.
- Oversized ball bearing with locked DE construction to minimize endplay.
- Dynamically balanced rotor to reduce noise and increase bearing life.
- Inverter-Ready.
- Motor enclosures available in both enclosed and open.
- 1.15 SF, Class F Insulation.
- Corrosion resistant finish.
- Maximum ambient temperature 40 °C (104 °F).

CSPEF150 100
END SUCTION CENTRIFUGAL WATER PUMP

Performance curves

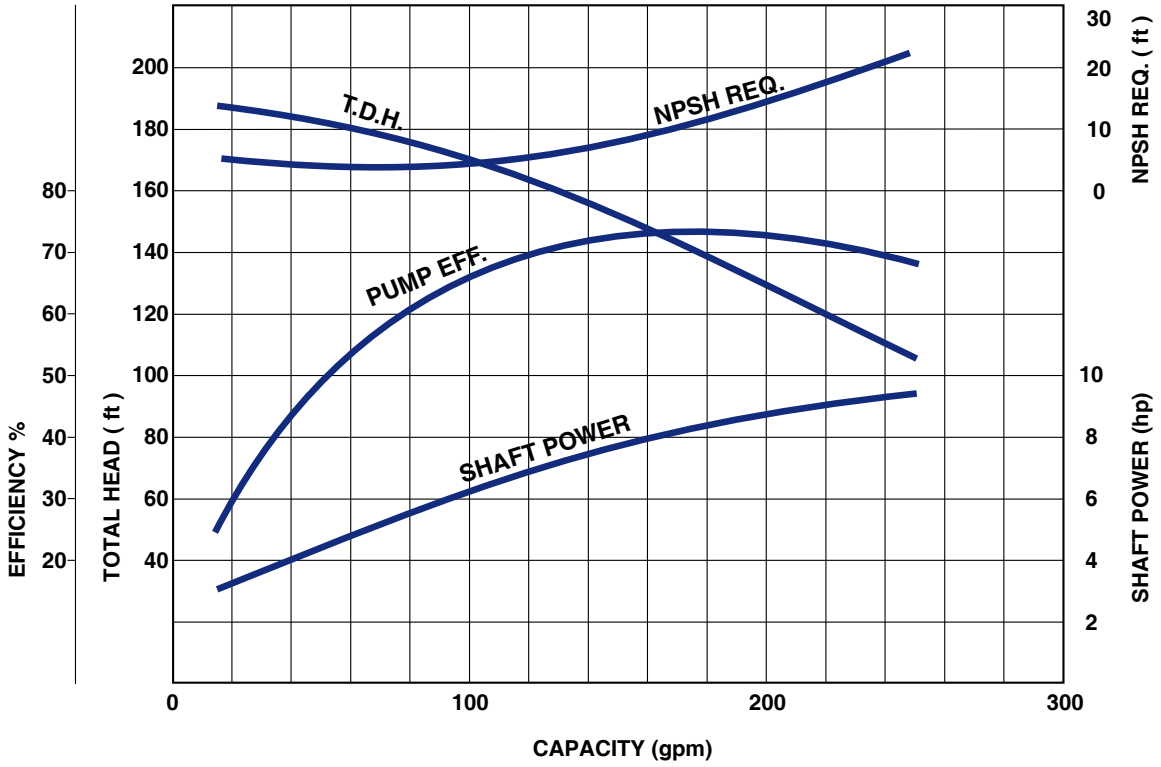

CSPEF150 100 - Flanged Ports - TEFC Motor

MODEL	HP	MOTOR	VOLT	PHASE	MAX. AMP	SUCT.	DISCH.	WEIGHT [lbs]
CSPEF150 100H36BTS-215JM	10	MVB 100H36T-215JM	230/460	3	23.2 / 11.6	2 1/2"	1 1/2"	133

CSPEF150 100 - Flanged Ports - ODP Motor

MODEL	HP	MOTOR	VOLT	PHASE	MAX. AMP	SUCT.	DISCH.	WEIGHT [lbs]
CSPEF150 100C16BOS-215JM	10	MVB 100C16O-215JM	230	1	46.0	2 1/2"	1 1/2"	182
CSPEF150 100H36BOS-213JM	10	MVB 100H36O-213JM	230/460	3	24.0 / 12.0	2 1/2"	1 1/2"	139

CSPEF150 100

END SUCTION CENTRIFUGAL WATER PUMP

Dimensions

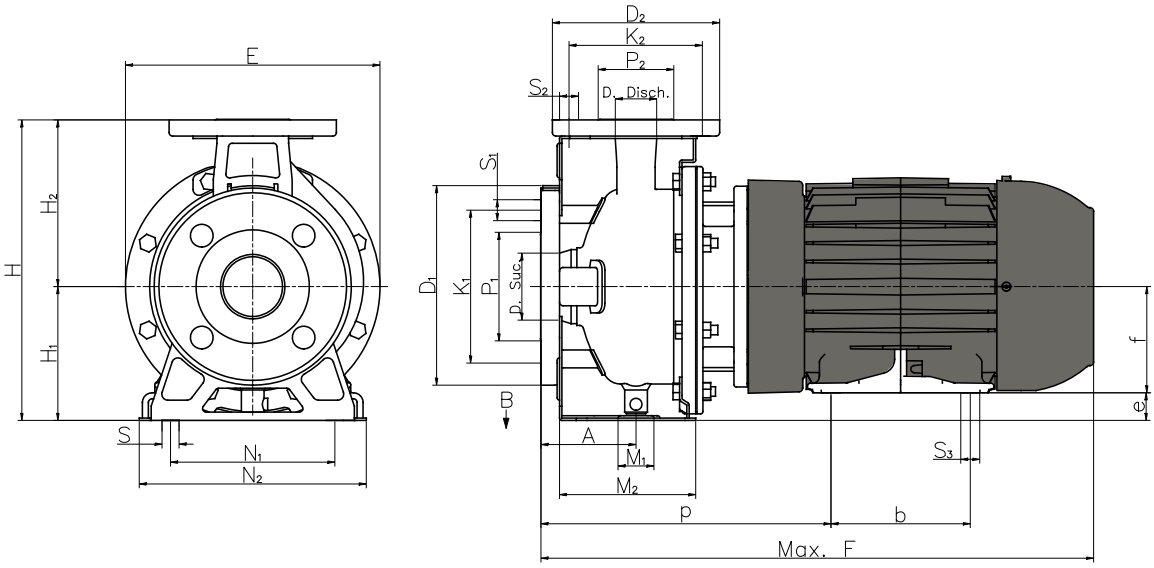

MODEL	SUCTION					DISCHARGE					PUMP									
	D	P1	K1	D1	s1	D	P2	K2	D2	S2	A	E	H	H1	H2	M1	M2	N1	N2	S
CSPEF150 100	2 1/2	4 9/16	5 11/16	7 5/16	1 1/16	1 1/2	2 7/8	3 7/8	5 7/8	5/8	3 1/8	10	11 1/2	5 3/16	6 5/16	2 3/4	4 5/8	7 1/2	9 7/16	9/16