CSPEF

END SUCTION CENTRIFUGAL WATER PUMP

CSPEF is an end-suction centrifugal pump. The water pump was designed taking into consideration the features needed to guarantee complete customer satisfaction, including:

- **Stainless steel end components.** High quality, and corrosion resistance.
- **Versatile mounting.** It can be installed horizontally or vertically.
- **Back pullout construction.** It allows for assemblyand overhaul of the impeller and seal withoutdistorting suction and discharge connections.
- **Top centerline discharge and foot support under casing.** It ensures self-venting and reduces misalignment from pipe loads.
- **High efficiency.** It lowers operating costs.
- **High quality mechanical shaft seals and o-rings.** Available for standard pumping requirements, or optional high temperature and chemical duty operation.
- Available as a complete pump or as a kit.

Applications

- Pressure Boosting.
- Plant Services.
- Irrigation.
- Water Supply Systems.
- Liquid Transfer.
- Ultrapure Water Systems.
- Water Reclamation and Treatment.
- Temperature Control.
- Air Conditioning Systems.

Operating Conditions

- Suction size: 2 1/2".
- Discharge size: 2".
- Power range: 7.5 - 15 hp.
- Capacity: 250 gpm.
- Head: 74 - 162 ft.
- Liquid: Clean water, Glycol, Dielectric Fluid.



Pump Construction

- Flanged ports.
- 304L Stainless Steel Casing.
- 304L Stainless Steel Impeller (closed type).
- 304L Stainless Steel Shaft Sleeve/Coupling.
- Cast Iron Bracket.
- Type 21 Carbon/ceramic/viton mechanical seal.

Motor

- 7.5 - 15 hp.
- JM Frame.
- Motor flange and shaft designed to support pump unit.
- Oversized ball bearing with locked DE construction to minimize endplay.
- Dynamically balanced rotor to reduce noise and increase bearing life.
- Inverter-Ready.
- Motor enclosures available in both enclosed and open.
- 1.15 SF, Class F Insulation.
- Corrosion resistant finish.
- Maximum ambient temperature 40 °C (104 °F).

CSPEF250 75
END SUCTION CENTRIFUGAL WATER PUMP

Performance curves

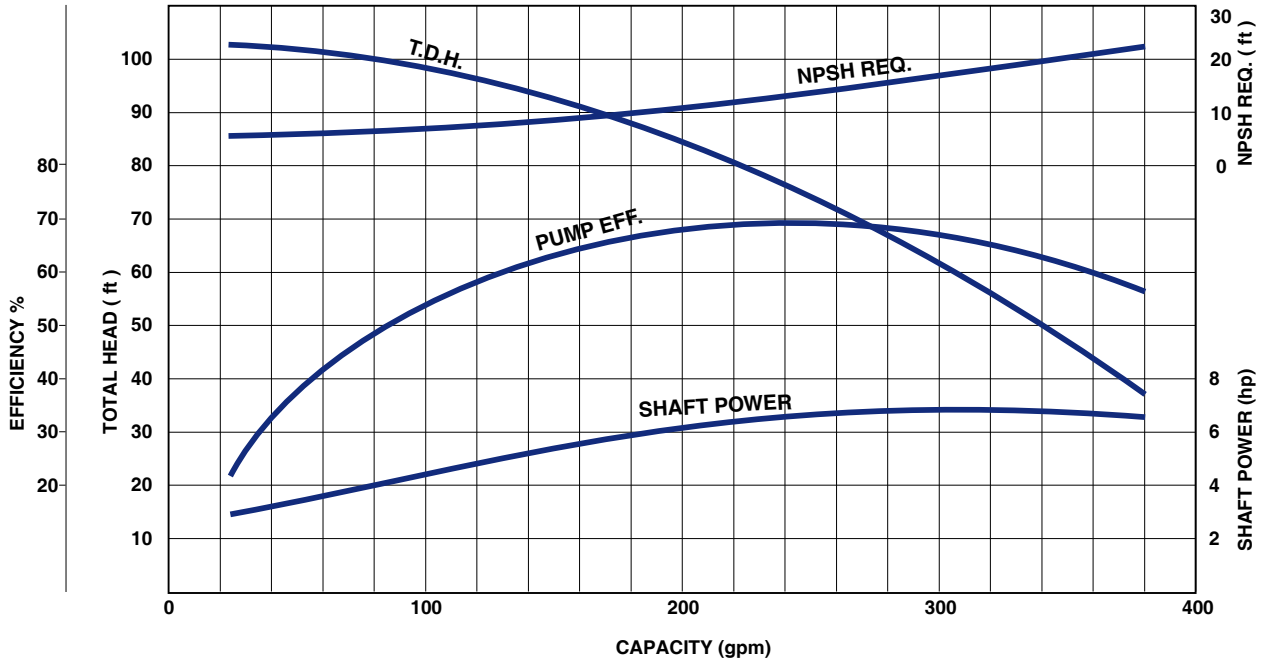

CSPEF250 75 - Flanged Ports - TEFC Motor

MODEL	HP	MOTOR	VOLT	PHASE	MAX. AMP	SUCT.	DISCH.	WEIGHT [lbs]
CSPEF250 75H36BTS-184JM	7.5	MVB 75H36T-184JM	230/460	3	16.8 / 8.4	2 1/2"	2"	133

CSPEF250 75 - Flanged Ports - ODP Motor

MODEL	HP	MOTOR	VOLT	PHASE	MAX. AMP	SUCT.	DISCH.	WEIGHT [lbs]
CSPEF250 75C16BOS-213JM	7.5	MVB 75C16O-213JM	230	1	37.0	2 1/2"	2"	163
CSPEF250 75H36BOS-184JM	7.5	MVB 75H36O-184JM	230/460	3	17.4 / 8.7	2 1/2"	2"	104

CSPEF250 75

END SUCTION CENTRIFUGAL WATER PUMP

Dimensions

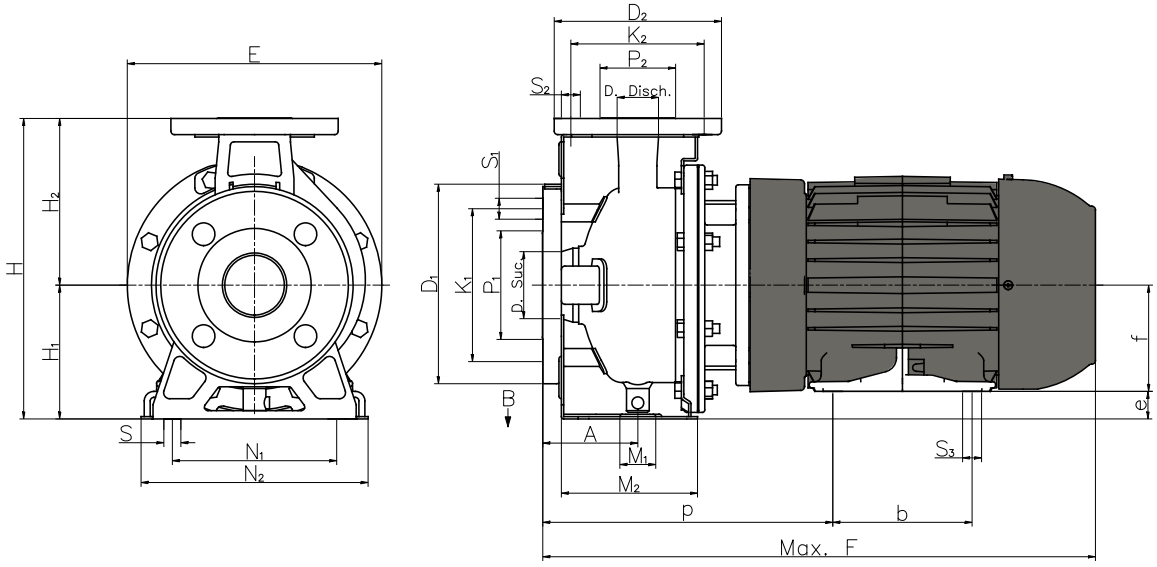

MODEL	SUCTION					DISCHARGE					PUMP									
	D	P1	K1	D1	s1	D	P2	K2	D2	S2	A	E	H	H1	H2	M1	M2	N1	N2	S
CSPEF250 75	2 1/2	4 9/16	5 11/16	7 5/16	11/16	2	3 3/4	4 15/16	6 1/2	11/16	3 15/16	10	11 1/2	5 3/16	6 5/16	2 3/4	4 1/2	7 1/2	9 7/16	9/16