CSPET

SS END SUCTION CENTRIFUGAL PUMPS

CSPET is an end-suction centrifugal pump. The water pump was designed taking into consideration the features needed to guarantee complete customer satisfaction, including:

- Close coupled design – saves space; simplifies maintenance and installation
- Stainless steel liquid end components – high quality; corrosion resistance
- Versatile mounting – can be installed horizontally or vertically
- Back pullout construction – allows for assembly and overhaul of the impeller and seal without distorting suction and discharge connections
- Top centerline discharge and foot support under casing – ensures self-venting and reduces misalignment from pipe loads
- High-efficiency – lowers operating costs
- High quality mechanical shaft seals and o-rings – available for standard pumping requirements, or optional high temperature and chemical duty operation
- Available as a complete pump or as a kit

Applications

- Pressure Boosting.
- Plant Services.
- Irrigation.
- Water Supply Systems.
- Liquid Transfer.
- Reverse osmosis.
- Ultrapure Water Systems.
- Water Reclamation and Treatment.
- Air Conditioning Systems.

Operating Conditions

- Suction Size: 1 1/4" NPT Thread
- Discharge Size: 1" NPT Thread
- Power Range: 0.5 - 2 hp
- Capacity: 10 - 35 gpm
- Head: 4 - 130 feet
- Liquid: Clean Water



Pump Construction

- Threaded ports NPT
- Two-stage pump with NEMA configuration
- 304L Stainless Steel Casing
- 304L Stainless Steel Impeller (closed type)
- Stainless Steel Shaft
- Aluminum Bracket
- Type 21 Mechanical Seal
- Ball Bearing

Motor

- 0.5 - 2 HP
- 56J frame
- Available in ODP or TEFC construction
- Sturdy steel frame
- Cast aluminum end plates with steel bearing seat inserts for mechanical reliability
- Automatic thermal overload protection
- Corrosion resistant stainless steel shaft extension
- Slotted opposite DE shaft for easy installation
- Optimized airflow design providing higher horsepower in a smaller package

CSPET20 15
SS END SUCTION CENTRIFUGAL PUMPS

Performance curves

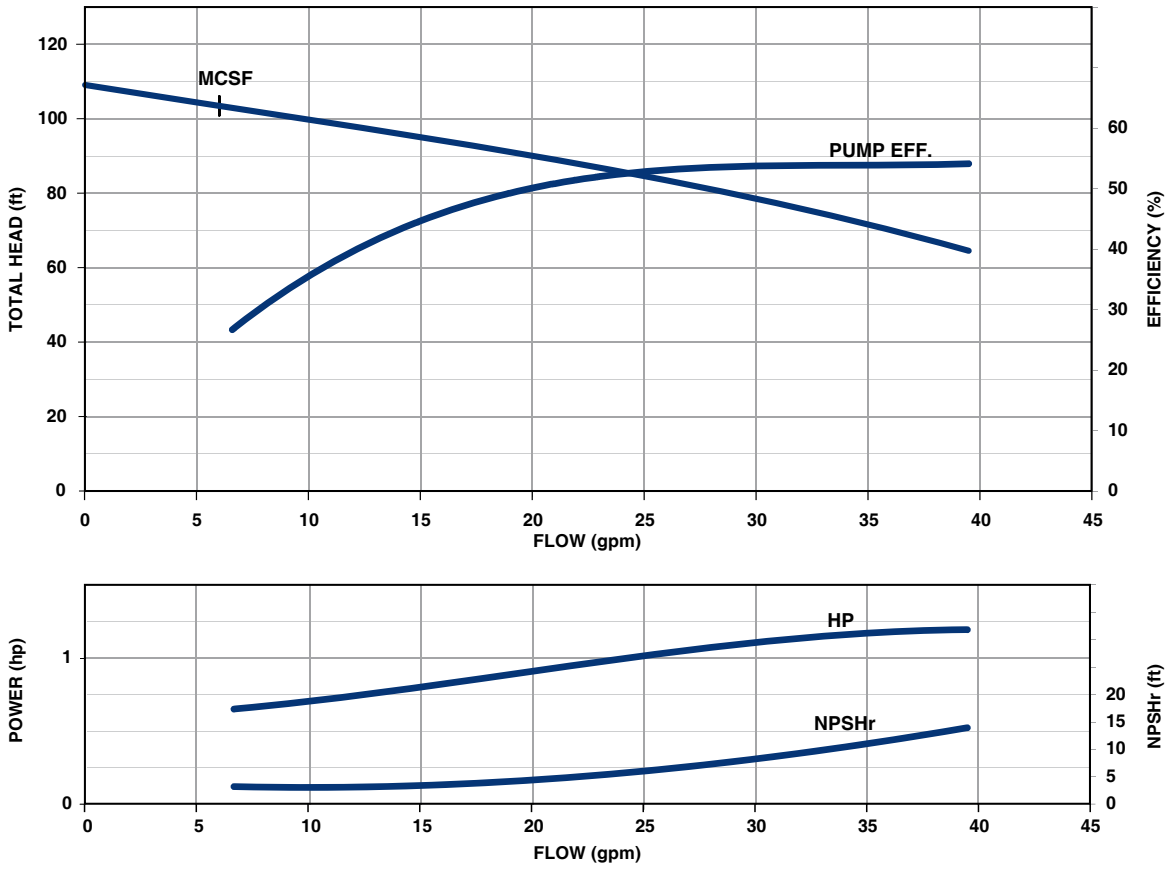

CSPET20 15 - Threaded Ports - TEFC Motor

MODEL	HP	MOTOR	VOLT	PHASE	MAX. AMP	SUCT.	DISCH.	WEIGHT [lbs]
CSPET20 15F16BTS	1,5	MVB 15F16T-056JS	115/230	1	16.6 / 8.3	1 1/4"	1"	50
CSPET20 15H36BTS	1,5	MVB 15H36T-056JS	230/460	3	3.8 / 1.9	1 1/4"	1"	39

CSPET20 15 - Threaded Ports - ODP Motor

MODEL	HP	MOTOR	VOLT	PHASE	MAX. AMP	SUCT.	DISCH.	WEIGHT [lbs]
CSPET20 15F16BOS	1,5	MVB 15F16O-056JS	115/230	1	13.0 / 6.5	1 1/4"	1"	47
CSPET20 15H36BOS	1,5	MVB 15H36O-056JS	230/460	3	4.0 / 2.0	1 1/4"	1"	39

CSPET20 15

SS END SUCTION CENTRIFUGAL PUMPS

Dimensions

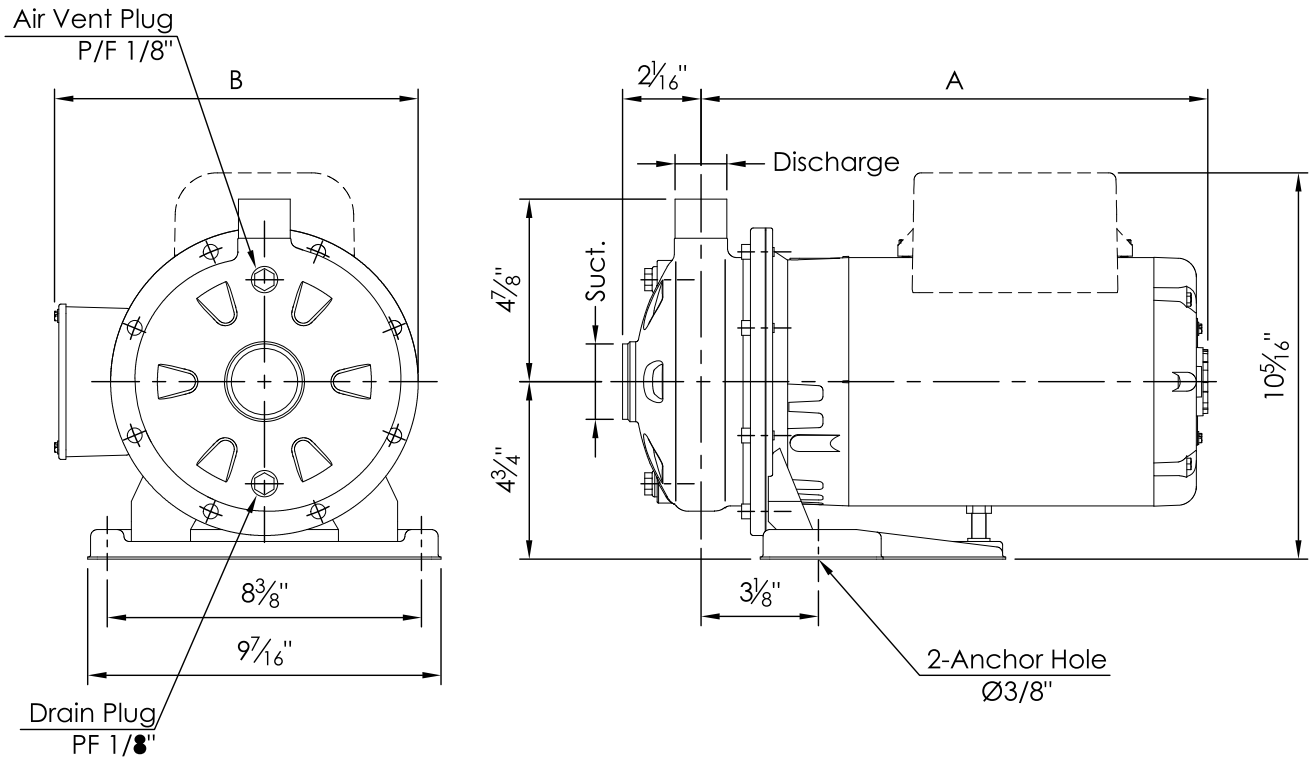

MODEL	SIZE	PUMP SIZE - NPT (IN)		DIMENSION (IN)		UNIT WEIGHT (LBS.)			
		SUCTION	DISCHARGE	A	B	SINGLE PHASE		THREE PHASE	
						ODP	TEFC	ODP	TEFC
CSPET20 15	1 x 1¼x 5 3/16	1¼	1	16 3/16	9 1/8	47	50	39	39