# CSPET

SS END SUCTION CENTRIFUGAL PUMPS

CSPET is an end-suction centrifugal pump. The water pump was designed taking into consideration the features needed to guarantee complete customer satisfaction, including:

- Close coupled design – saves space; simplifies maintenance and installation
- Stainless steel liquid end components – high quality; corrosion resistance
- Versatile mounting – can be installed horizontally or vertically
- Back pullout construction – allows for assembly and overhaul of the impeller and seal without distorting suction and discharge connections
- Top centerline discharge and foot support under casing – ensures self-venting and reduces misalignment from pipe loads
- High-efficiency – lowers operating costs
- High quality mechanical shaft seals and o-rings – available for standard pumping requirements, or optional high temperature and chemical duty operation
- Available as a complete pump or as a kit

## Applications

- Pressure Boosting.
- Plant Services.
- Irrigation.
- Water Supply Systems.
- Liquid Transfer.
- Reverse osmosis.
- Ultrapure Water Systems.
- Water Reclamation and Treatment.
- Air Conditioning Systems.

## Operating Conditions

- Suction Size: 1 1/4" NPT Thread
- Discharge Size: 1" NPT Thread
- Power Range: 1 - 3 hp
- Capacity: 20 - 55 gpm
- Head: 46 - 110 feet
- Liquid: Clean Water



## Pump Construction

- Threaded ports NPT
- Two-stage pump with NEMA configuration
- 304L Stainless Steel Casing
- 304L Stainless Steel Impeller (closed type)
- Stainless Steel Shaft
- Aluminum Bracket
- Type 21 Mechanical Seal
- Ball Bearing

## Motor

- 1 - 3 HP
- 56J frame
- Available in ODP or TEFC construction
- Sturdy steel frame
- Cast aluminum end plates with steel bearing seat inserts for mechanical reliability
- Automatic thermal overload protection
- Corrosion resistant stainless steel shaft extension
- Slotted opposite DE shaft for easy installation
- Optimized airflow design providing higher horsepower in a smaller package

# CSPET50 30
SS END SUCTION CENTRIFUGAL PUMPS

## Performance curves

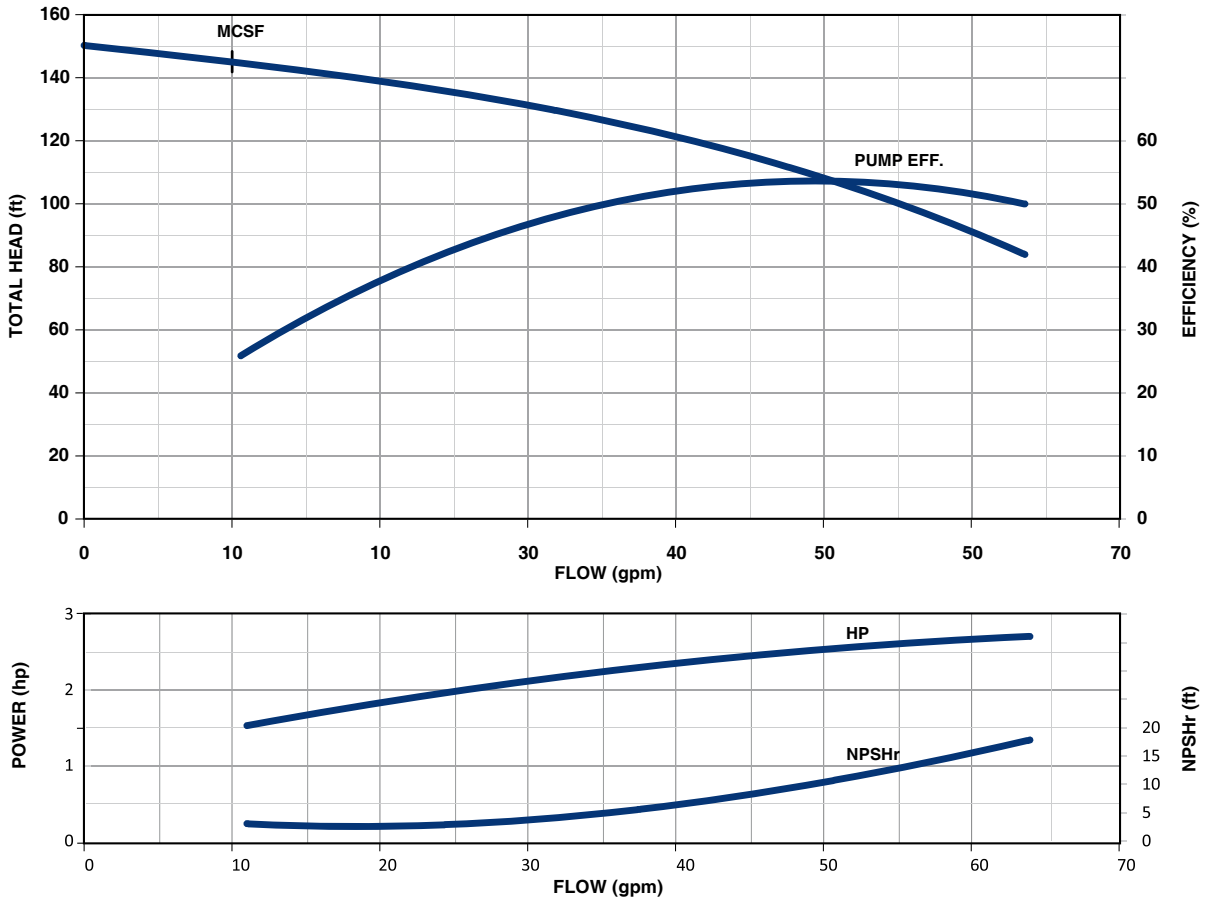


## CSPET50 30 - Threaded Ports - TEFC Motor

| MODEL | HP | MOTOR | VOLT | PHASE | MAX. AMP | SUCT. | DISCH. | WEIGHT [lbs] |
|---|---|---|---|---|---|---|---|---|
| **CSPET50 30H36BTS** | 3 | MVB 30H36T-056JS | 230/460 | 3 | 7.2 / 3.6 | 1 1/4" | 1" | 60 |

## CSPET50 30 - Threaded Ports - ODP Motor

| MODEL | HP | MOTOR | VOLT | PHASE | MAX. AMP | SUCT. | DISCH. | WEIGHT [lbs] |
|---|---|---|---|---|---|---|---|---|
| **CSPET50 30C16BOS** | 3 | MVB 30C16O-056JS | 230 | 1 | 13,0 | 1 1/4" | 1" | 59 |
| **CSPET50 30H36BOS** | 3 | MVB 30H36O-056JS | 230/460 | 3 | 8.0 / 4.0 | 1 1/4" | 1" | 51 |

# CSPET50 30

SS END SUCTION CENTRIFUGAL PUMPS

## Dimensions

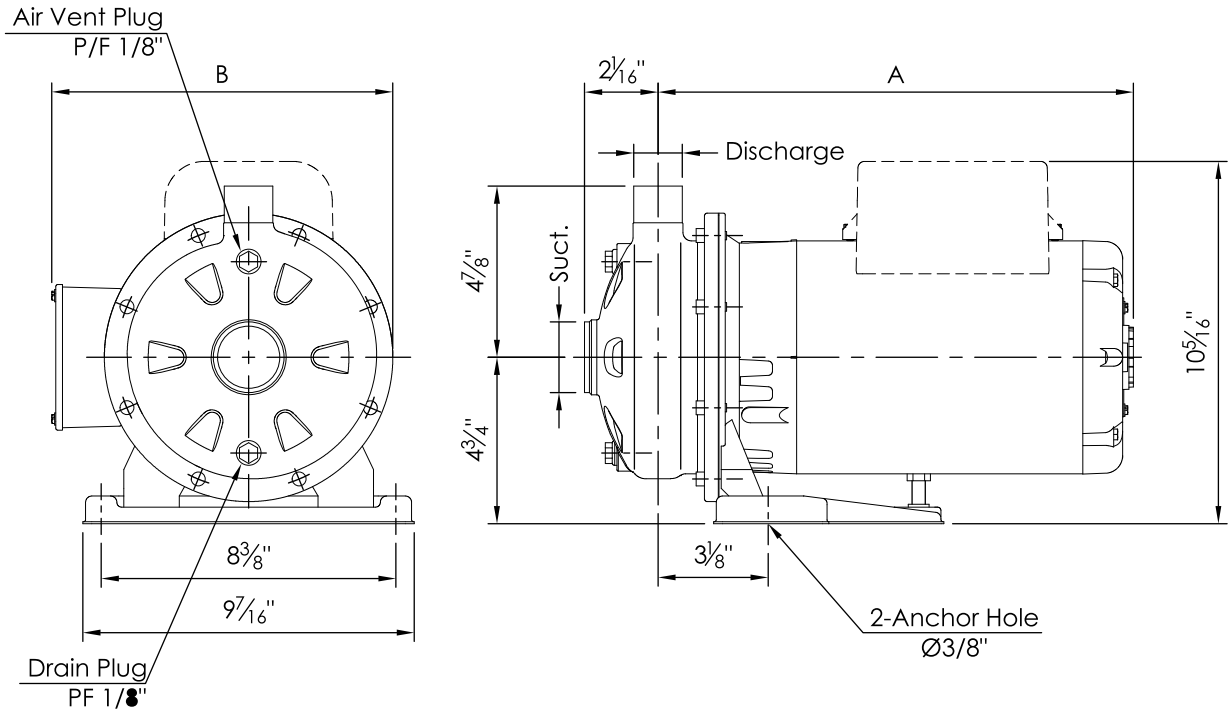


| MODEL | SIZE | PUMP SIZE - NPT (IN) | | DIMENSION (IN) | | UNIT WEIGHT (LBS.) | | | |
|---|---|---|---|---|---|---|---|---|---|
| | | | | | | SINGLE PHASE | | THREE PHASE | |
| | | SUCTION | DISCHARGE | A | B | ODP | TEFC | ODP | TEFC |
| CSPET50 30 | 1 x 1¼ x 6 3/16 | 1¼ | 1 | 17 3/8 | 9 1/8 | 59 | 66 | 51 | 60 |