CEC

Close coupled pumps with threaded ports

INSTALLATION AND OPERATING INSTRUCTIONS

Before installation, you should carefully read this manual, and pay attention to safety cautions and instructions in this manual. Our factory is neither responsible for nor is reliable for paying compensation for personal injury, pump damage and other property losses caused by violation of safety cautions.



1. SAFETY INSTRUCTIONS

TO AVOID SERIOUS OR FATAL PERSONAL INJURY OR MAJOR PROPERTY DAMAGE, READ AND FOLLOW ALL SAFETY INSTRUCTIONS IN MANUAL AND ON PUMP.
THIS MANUAL IS INTENDED TO ASSIST IN THE INSTALLATION AND OPERATION OF THIS UNIT AND MUST BE KEPT WITH THE PUMP.

	This is a SAFETY ALERT SYMBOL. When you see this symbol on the pump or in the manual, look for one of the following signal words and be alert to the potential for personal injury or property damage.
	Warns of hazards that WILL cause serious personal injury, death or major property damage.
	Warns of hazards that CAN cause serious personal injury, death or major property damage.
	Warns of hazards that CAN cause personal injury or property damage.
	INDICATES SPECIAL INSTRUCTIONS WHICH ARE VERY IMPORTANT AND MUST BE FOLLOWED.

THOROUGHLY REVIEW ALL INSTRUCTIONS AND WARNINGS PRIOR TO PERFORMING ANY WORK ON THIS PUMP. MAINTAIN ALL SAFETY DECALS.

UNIT NOT DESIGNED FOR USE WITH HAZARDOUS LIQUIDS OR FLAMMABLE GASES. THESE FLUIDS MAY BE PRESENT IN CONTAINMENT AREAS.

1.2 Authorized operators

The product is intended for use by expert operators divided into end users and specialized technicians. (see the symbols above).

NOTICE:

It's forbidden, for the end user, carry out operations which must be done only by specialized technicians. The manufacturer declines any liability for damage related to the non-compliance of this warning.

1.3 Warranty

For the product warranty refer to the general terms and conditions of sale.
NOTICE:

The warranty covers only the replacement and the repair of the defective parts of the goods (recognized by the manufacturer). The Warranty will not be considered in the following cases:

- Whenever the use of the device does not conform to the instructions and information described in this manual.
- In case of changes or variations made without authorization of the manufacturer.
- In case of technical interventions executed by a non-authorized personnel.
- In case of failing to carry out adequate maintenance.

1.4 Technical assistance

Any further information about the documentation, technical assistance and spare parts, shall be requested from: PD Water Systems.

2. DESCRIPTION AND SPECIFICATIONS

The CEC (closed-coupled) are single impeller, end suction, centrifugal pumps for water circulation, booster service, liquid transfer, spraying systems, jockey pump and general service pumping.

Pump impellers are enclosed design for high efficiency, threaded directly on the motor shaft.

This appliance is not intended for use by persons (including children) with reduced physical, sensory or mental capabilities, or lack of experience and knowledge, unless they have been given supervision or instruction concerning use of the appliance by a person responsible for their safety. Children should be supervised to ensure that they do not play with the appliance.

Do not use in ponds, tanks or swimming pools when people may enter or come into contact with the water.

3. OPERATING CONDITIONS

Standard construction:

- For clean liquids without abrasives, non-explosive, non-aggressive for the pump materials, with a maximum temperature of 194 °F (90 °C).

- Maximum permissible working pressure: 145 psi (10 bar)
- Installation in well ventilated location protected from the weather, with a maximum ambient temperature of 104 °F (40 °C)

Sound pressure: up to 3 HP (2.2 kW): ≤ 70 dB (A).
Starts per hour max: 20.

4. INSTALLATION

These pumps must be installed with the rotor axis horizontal and feet downwards.
The pumps can be installed in other positions, if supported by rigid and stable pipes and if filling and draining of the pump casing and drainage of condensation from the motor remain possible. For safety reasons avoid the position with the motor under the pump.
Place the pump as close as possible to the suction source.

5. PIPING

The inside diameter of the pipe-work depends on the desired flow.
Provide a diameter assuring a liquid flow not greater than 4.9 ft/s for suction and 9 ft/s for delivery.
The pipe diameters must never be smaller than the pump connections.
Ensure the inside of pipes are clean before connection.
Secure all pipes to rests and connect them so that they are not under stress, and do not transmit vibration or flexing strain to the pump.
The suction pipe must be perfectly airtight and be led upwards in order to avoid air pockets.
For suction lift operation fit a foot valve with strainer which must always remain immersed.
For suction from a storage tank fit a check valve.
For positive suction head operation fit a gate valve.
Follow local specifications if increasing network pressure.
Fit a gate valve into the delivery pipe to adjust delivery, head, and absorbed power. Install a pressure gauge.
With a geodetic head outlet over 49 ft (15 m) fit a check valve between the pump and the gate valve in order to protect the pump from water hammering.

6. WIRING AND GROUNDING

All electrical work must be performed by a qualified technician. Always follow the National Electrical Code (NEC), or the Canadian Electrical Code, as well as all local, state and provincial codes.
Code questions should be directed to your local electrical inspector. Failure to follow electrical codes and OSHA safety standards may result in personal injury or equipment damage. Failure to follow manufacturer's installation instructions may result in electrical shock, fire hazard, personal injury or death, damaged equipment, provide unsatisfactory performance, and may void manufacturer's warranty

Install, ground and wire according to local and National Electrical Code Requirements. Install an all leg disconnect switch near the pump. Disconnect and lockout electrical power before installing or servicing the pump. Electrical supply MUST match pump's nameplate specifications. Incorrect voltage can cause fire, damage to the motor and voids the warranty.

Motors not protected MUST be provided with contactors and thermal overloads for single phase motors, or starters with heaters for three phase motors.

Use only copper wire to motor and ground. The ground wire MUST be at least as large as the wire to the motor. Wires should be color coded for ease of maintenance.

FAILURE TO PERMANENTLY GROUND THE PUMP, MOTOR AND CONTROLS BEFORE CONNECTING TO ELECTRICAL POWER CAN CAUSE SHOCK, BURNS OR DEATH.

NOTICE:

Never allow washers orother metal parts to fall into the internal cable opening between the terminal box and stator.
If this occurs, dismantle the motor to recover the object which has fallen inside.

7. STARTING

Never run the pump dry - not even for a short trial run. Start the pump after filling it completely with liquid.

When the pump is located above the water level (suction lift operation) fill the suction pipe and the pump through the priming hole.
When the liquid level on the suction side is above the pump (inflow under positive suction head), fill the pump by opening the suction gate valve slowly and completely, keeping the delivery gate valve open to release the air.
Check that the shaft turns by hand.
For this purpose the smaller pumps have a screwdriver notch on the ventilation side of the shaft end.
Check that the pump works within its field of performance, and that the absorbed current shown on the name-plate is not exceeded.
Otherwise adjust the delivery gate valve or the setting of any pressure switches.

8. ROTATION

NOTICE:

INCORRECT ROTATION MAY CAUSE DAMAGE TO THE PUMP AND VOIDS THE WARRANTY.

Correct rotation is right-hand, CLOCKWISE when viewed from the motor end. Remove motor end plug or cover to observe

rotation.
To reverse three phase motor rotation, interchange any two power supply leads.

IMMERSING MOTORS IN FLUID CAN CAUSE FIRE, SHOCK, BURNS OR DEATH.

NOTICE:

DO NOT RUN PUMP DRY OR SEAL DAMAGE WILL RESULT.

After stabilizing the system at normal operating conditions, check the piping. If necessary, adjust the pipe supports.

10. MAINTENANCE

When the pump is not used, empty it completely if freezing may be expected. If the pump has been used for unclean liquids, flush the pump with clean water before draining.
Remove the drain plug (14.12/16.04).

Before restarting the unit, check that the shaft is not jammed and fill the pump casing completely with liquid.

Disconnect electrical power before any servicing operation and make sure the pump cannot be accidentally switched on.

11. DISMANTLING

Close the suction and delivery gate valves and drain the pump casing before dismantling the pump.
For dismantling and re-assembly see construction in the cross section drawing.

With the CEC pumps the motor can be taken out, by removing the screws (14.24), complete with impeller without removing the pump casing and the pipes.

12. SPARE PARTS

When ordering spare parts, please quote data stamped on the name-plate and the position number of each spare part required in accordance with the cross section drawing.
Use bearings with C3 clearance and grease for high temperatures.

Any pumps that require inspection/ repair must be drained and carefully cleaned inside and outside before dispatch/submission.

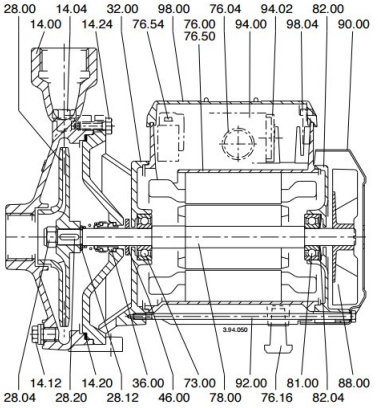

14.00 Pump casing
14.04 Plug (filling)
14.12 Plug (draining)
14.20 O-ring
14.24 Screw
16.00 Suction casing
16.04 Plug with washer
16.12 Air release plug with washer
16.20 Casing gasket
18.00 Interstage plate
20.00 Delivery casing
20.04 Plug with washer
20.12 Screw
28.00 Impeller
28.04 Impeller nut
28.12 Circlip
28.20 Impeller key
30.00 Impeller
32.00 Lantern bracket
32.30 Guard
32.32 Screw
32.33 Caged Nut
36.00 Mechanical seal
36.50 Shoulder ring
46.00 Deflector
70.00 Lantern bracket
70.18 Screw
70.19 Nut
70.20 Screw
73.00 Pump-side bearing
76.00 Motor casing with winding
76.04 Cable gland
76.16 Support
76.20 Pin
76.54 Terminal box, set
78.00 Shaft with rotor packet
81.00 Fan-side bearing
82.00 Motor end shield, fan side
82.04 Compensating spring
88.00 Motor fan
90.00 Fan cover
90.04 Screw
92.00 Tie-bolt
94.00 Capacitor
94.02 Capacitor gland
98.00 Terminal box cover
98.04 Screw
98.08 Gasket
99.00 Motor, complete

14. TROUBLESHOOTING

Disconnect electrical power before any servicing operation and make sure the pump cannot be accidentally switched on.

Do not allow the electric pump to run when dry even for a short period strictly follow the user instructions and if necessary contact an authorized service center.

PROBLEM	POSSIBLE CAUSE	REMEDY
The electric motor does not start	Unsuitable power supply	Check that the main frequency and voltage correspond to the electrical characteristics shown on the indicator plate
	Incorrect electrical connections	Connect the power supply cable to the terminal board correctly. Check that the thermal overload protection is set correctly (see data on the electric motor indicator plate) and make sure that the fuseboard upline of the electric motor has been properly connected
	Electric motor overload protective device cuts in.	Check the power supply and make sure that the pump shaft is turning freely. Check that the thermal overload protection has been set correctly (see electric motor indicator plate)
	Blown or defective fuses	Replace the fuses, check the electric power supply and points a) and c)
	Shaft blocked	Remove the cause of blockage as indicated in the “Blocked pump” instruction booklet
	If the above causes have already been checked, the electric motor may be malfunctioning	Repair or replace the electric motor by applying to an authorised service centre
Pump blocked	Prolonged periods of inactivity with formation of rust inside the pump	The electric pump and small size motor-cylinder blocks can be unblocked by using a screw driver to turn the relevant notch on the back of the shaft. For bigger units rotation may be started directly from the pump shaft or from the joint (remember to turn off the electricity supply first) or contact an authorized service center.
	Presence of solid bodies in the pump rotor	If possible, dismantle the pump casing and remove any solid foreign bodies inside the rotor, if necessary contact an authorized service center.
	Bearings blocked	If the bearings are damaged replace them or if necessary contact an authorized service center
The pump functions but no water comes out	Presence of air inside the pump or suction tube	Release the air from the pump using the pump plugs and/or using the delivery control valve. Repeat the filling operations until all air has been expelled
	Possible infiltration of air from suction tube connections, drain plugs or filling of pump or from the gaskets of the suction pipe	Check which part is not tight and seal the connection adequately
	Foot valve blocked or suction pipe not fully immersed in liquid	Clean or replace the bottom valve and use a suction pipe suitable for the application
	Suction filter blocked	Clean the filter, if necessary, replace it If possible, dismantle the pump casing and remove any solid foreign bodies inside the rotor, if necessary contact an authorized service center
Insufficient flow	Pipes and accessories with diameter too small causing excessive loss of head	Use pipes and accessories suitable for the specific application
	Presence of deposits or solid bodies in the internal passages of the rotor	Clean the rotor and install a suction filter to prevent other foreign bodies from entering
	Rotor deteriorated	Replace the rotor, if necessary, contact an authorized service center.
	Worn rotor and pump case	Replace the rotor and the pump casing
	Gases dissolved in the water	Perform the opening and closing manoeuvres through the feeder gate to eliminate the gas inside the pump casing .If the problem persists, contact an authorized service center
	Excessive viscosity of the liquid pumped (if other than water)	The pump is unsuitable
	Incorrect direction of rotation	Invert the electrical connections on the terminal board or control panel
	Suction head excessive in relation to the suction capacity of pump	Try to close the feeder gate partially and/or reduce the difference in level of the pump and the liquid being aspirated
	Suction pipe too long	Bring the pump closer to the suction tank so as to use a shorter pipe. If necessary use a pipe of a wider diameter

PROBLEM	POSSIBLE CAUSE	REMEDY
Noise and vibrations from the pump	Rotating part unbalanced	Check that no solid bodies are obstructing the rotor
	Worn bearings	Replace the bearings
	Pump and pipes not firmly attached	Anchor the delivery and suction piping as needed
	Flow too strong for the diameter of the delivery pipe	Use bigger diameters or reduce the pump flow
	Functioning in cavitation	Reduce the flow by adjusting the feeder gate and/or using pipes with a bigger internal diameter. Try to close the feeder gate partially and/or reduce the difference in level of the pump and the liquid being aspirated
	Unbalanced power supply	Check that the mains voltage is right
Leakage from the mechanical seal	The mechanical seal has functioned when dry or has stuck	Replace the seal, if necessary contact an authorized service centre Make sure that the pump casing (and the suction pipe if the pump is not selfpriming) are full of liquid and that all the air has been expelled Reduce the flow by adjusting the feeder gate and/or using pipes with a bigger internal diameter Try to close the feeder gate partially and/or reduce the difference in level of the pump and the liquid being aspirated
	Mechanical seal scored by presence of abrasive parts in the liquid pumped	Replace the seal, if necessary contact an authorized service center Install a suction filter and use a seal suited to the characteristics of the liquid being pumped
	Mechanical seal unsuitable for the type of application	Replace the seal, if necessary contact an authorized service center. Choose a seal with characteristics suitable for the specific application
	Slight initial drip during filling or on first start-up	Wait for the seal to adjust to the rotation of the shaft. If the problem persists Make sure that the pump casing (and the suction pipe if the pump is not selfpriming) are full of liquid and that all the air has been expelled Install a suction filter and use a seal suited to the characteristics of the liquid being pumped Choose a seal with characteristics suitable for the specific application Or contact an authorized service center

PD WATER SYSTEMS LLC
2310 W. 76TH ST. HIALEAH, FL 33016. TEL: (954) 474 9090
www.pearlwatersystems.com