Pearl® Water Systems

Two Stage Stainless Steel
End Suction Centrifugal Pumps
Treaded Ports

C2SPET

SPARE PARTS

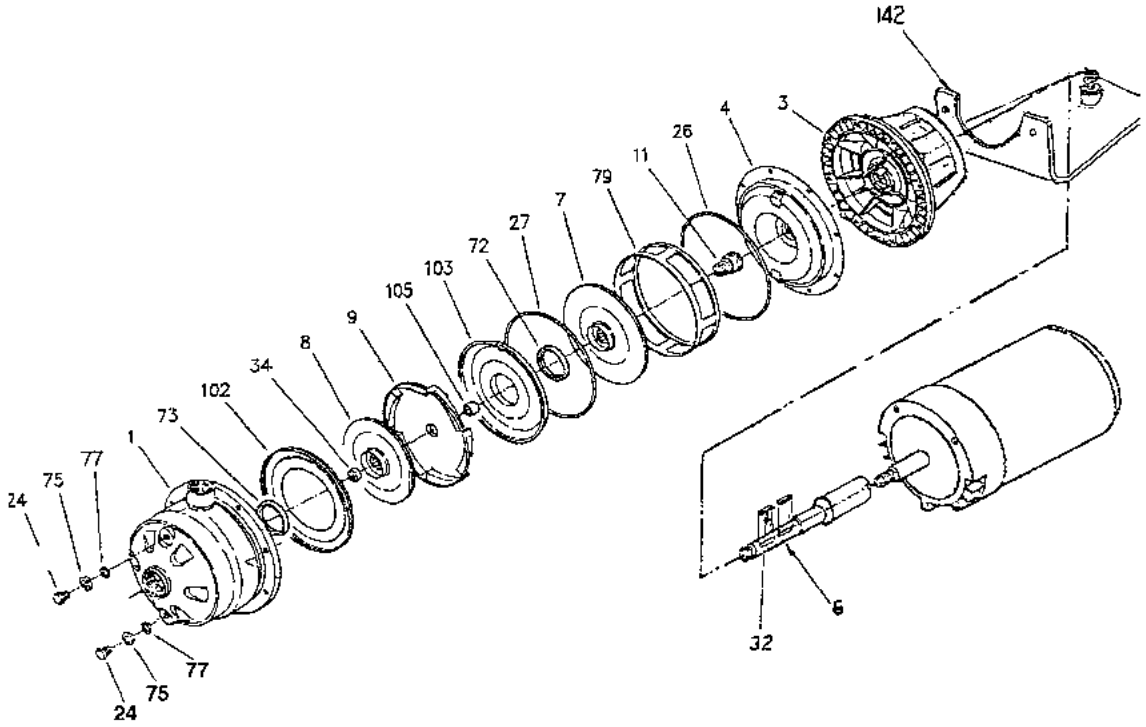

Part No.	Part Name	Materials
001	Casing	304 Stainless
003	Motor bracket	Cast Aluminum
004	Casing cover	304 Stainless
006	Shaft Extension	304 Stainless
007	Impeller	304 Stainless
008	Impeller	304 Stainless
009	Diffuser	304 Stainless
011	Mechanical Seal Type 21	Carbon/Ceramic
024	Priming plug/Drain plug (2)	304 Stainless
026	O-Ring	Viton
027	O-Ring	Viton
032	Key (2)	Stainless
034	Impeller nut	304 Stainless/Nylon
072	Casing ring	Viton
073	Casing ring	Viton
075	Washer (2)	304 Stainless
077	O-Ring (2)	Viton
079	Spacer diffuser	304 Stainless
102	Suction cover	304 Stainless
103	Conveyor cover	304 Stainless
105	Sleeve	304 Stainless