Parts Designation

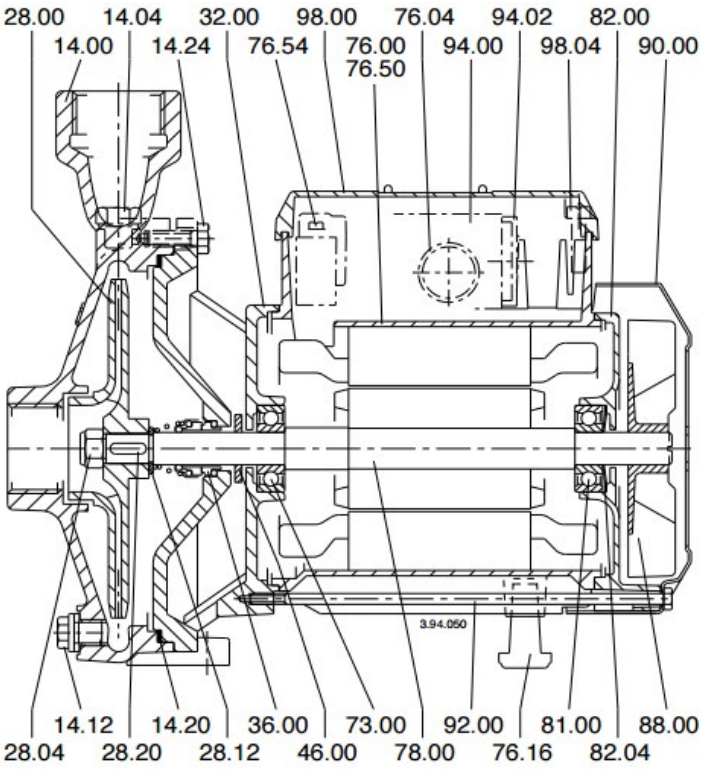

14.00 Pump casing
14.04 Plug (filling)
14.12 Plug (draining)
14.20 O-ring
14.24 Screw
16.00 Suction casing
16.04 Plug with washer
16.12 Air release plug with washer
16.20 Casing gasket
18.00 Interstage plate
20.00 Delivery casing
20.04 Plug with washer
20.12 Screw
28.00 Impeller
28.04 Impeller nut
28.12 Circlip
28.20 Impeller key
30.00 Impeller
32.00 Lantern bracket
32.30 Guard
32.32 Screw
32.33 Caged Nut
36.00 Mechanical seal
36.50 Shoulder ring
46.00 Deflector
70.00 Lantern bracket
70.18 Screw
70.19 Nut
70.20 Screw
73.00 Pump-side bearing
76.00 Motor casing with winding
76.04 Cable gland
76.16 Support
76.20 Pin
76.54 Terminal box, set
78.00 Shaft with rotor packet
81.00 Fan-side bearing
82.00 Motor end shield, fan side
82.04 Compensating spring
88.00 Motor fan
90.00 Fan cover
90.04 Screw
92.00 Tie-bolt
94.00 Capacitor
94.02 Capacitor gland
98.00 Terminal box cover
98.04 Screw
98.08 Gasket
99.00 Motor, complete