CEP/C2P
Centrifugal water pumps



Parts Designation

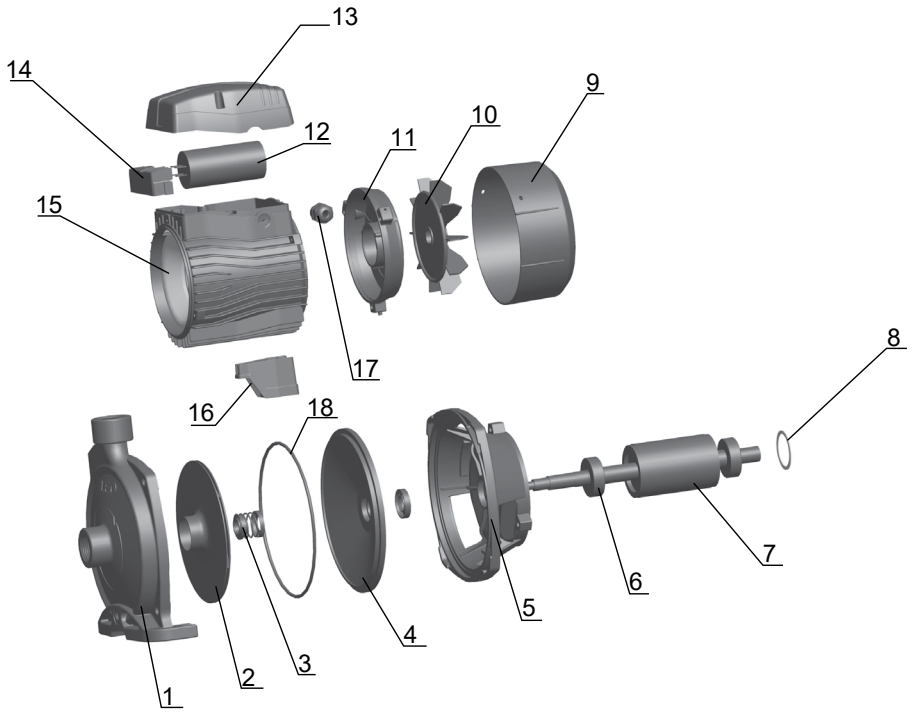

1. Pump body
2. Impeller
3. Mechanical seal
4. Seal holder
5. Motor bracket
6. Bearing
7. Rotor
8. Spring washer
9. Fan cover
10. Fan
11. Motor back cover
12. Capacitor
13. Capacitor box cover
14. Terminal board
15. Motor winding
16. Motor foot
17. Cable gland
18. O-sealing ring