CQPL 10F16S

High-Flow Centrifugal Pumps

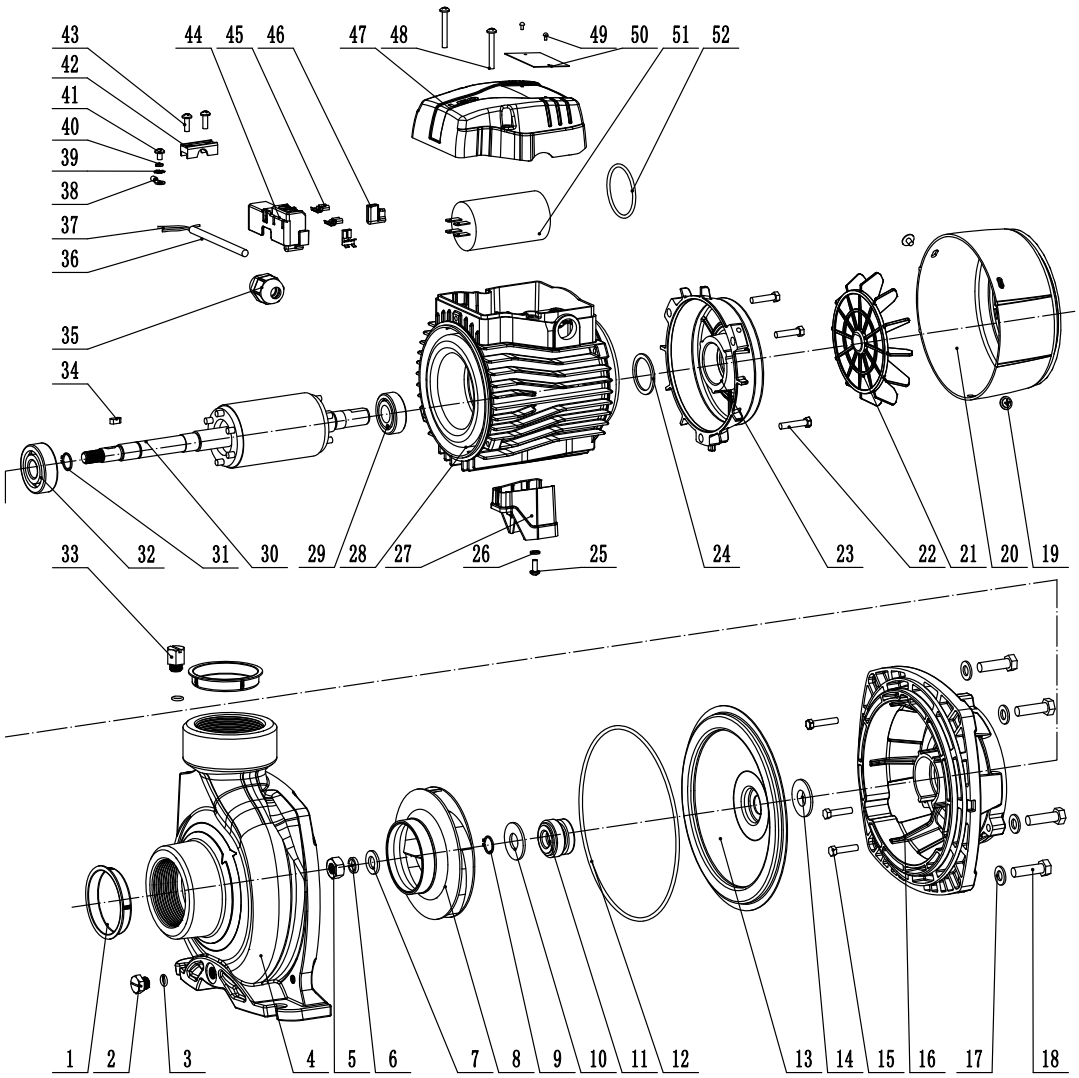

Item No.	Part Code	Part Name	Qty
1	40003899	Dust cover	2
2	10000963	Injection plug	1
3	10000547	O-ring 8.2x1.9	2
4	40017765	Pump body	1
5	10000300	Hexangular nut M10	1
6	10001209	Spring washer 10	1
7	10001429	Washer 10	1
8	10010497	Impeller	1
9	10001632	Circlips 14	1
10	10005317	Washer	1
11	10001263	Mechanical seal	1
12	10000490	O-ring 158.8x3.1	1
13	10004084	Bracket cover	1
14	10000961	Rubber washer	1
15	10001329	Hex bolt M5x22	4
16	40024900	Bracket	1
17	10001442	Washer 8	4
18	10001357	Hex bolt M8x28	4

Item No.	Part Code	Part Name	Qty
19	10033436	Cross screw M4x6	2
20	40013649	Fan cover	1
21	40005415	Fan	1
22	10001330	Hex bolt M5x25	2
23	40024899	Rear end cover	1
24	10004846	Wave spring D35	1
25	10001480	Screw M4x10	1
26	10001435	Washer 4	1
27	40014275	Support feet	1
28	40024892	Stator	1
29	10001169	Bearing 6202-2Z	1
30	40024875	Rotor	1
31	10007038	Circlips 15	1
32	10001198	Bearing 6302-2Z	1
33	10000966	Water injection plug	1
34	10001464	Flat key 4x4x10	1
35	10000889	Outlet nozzle	1
36	10001790	Plug line	1

Item No.	Part Code	Part Name	Qty
37	10001289	Terminal lug	1
38	10001122	Lug	1
39	10001583	Lock washer	1
40	10001212	Spring washer 4	1
41	10010179	Screw M4x8	1
42	10004878	Pressure clamp	1
43	10010269	Screw M4x12	2
44	40017434	Terminal	1
45	10001134	Plug spring	3
46	10002560	Curved sheath	1
47	40014262	Cover box	1
48	10009928	Screw M4x32	2
49	10001386	Rivet 2x4	2
50	30028644	Nameplate	1
51	10009955	Capacitor 20uF 450V	1
52	10010032	O-ring 38x2.65	1

CQPL 20F16S

High-Flow Centrifugal Pumps

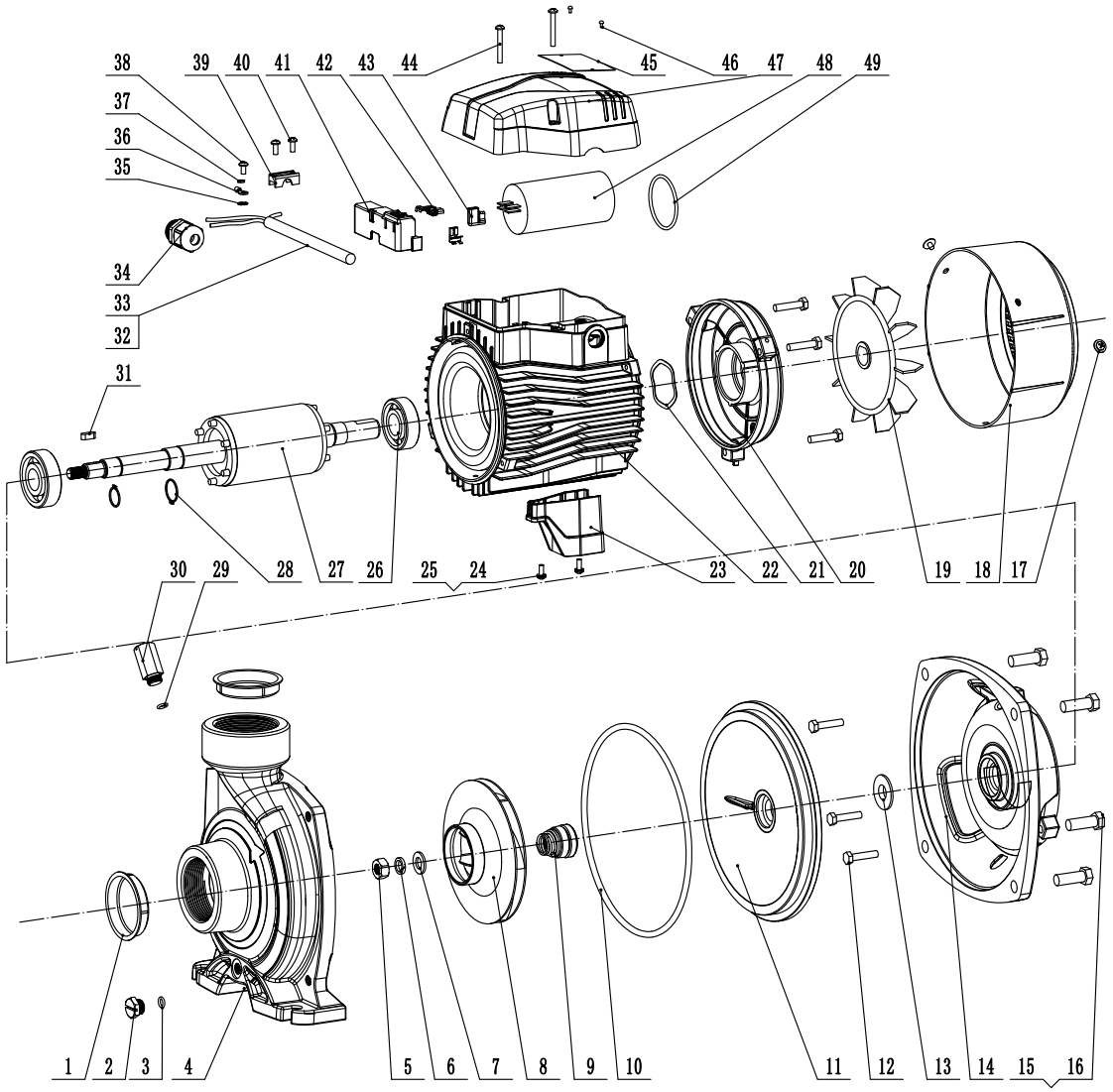

Item No.	Part Code	Part Name	Qty
1	40003899	Dust cover	2
2	10000963	Water injection plug	1
3	10000547	O-ring 8.2x1.9	2
4	40018267	Pump body	1
5	10000300	Hex nut M10	1
6	10001209	Spring washer 10	1
7	10001429	Washer 10	1
8	10013054	Impeller	1
10	10001284	Mechanical seal	1
11	40008166	Bracket cover	1
12	10001342	Hex bolt M6x28	6
13	10000970	Water proof gland	1
14	40002743	Bracket	1
15	10010359	Hex bolt M10x28	4
16	10000351	Washer 10	4
17	10033436	Screw M4x6	2
18	40014321	Fan cover	1

Item No.	Part Code	Part Name	Qty
19	40003266	Fan	1
20	40014323	Rear end cover	1
21	10001140	Wave spring D47	1
22	40026080	Stator	1
23	40014328	Support feet	1
24	10004850	Screw M4x12	2
25	10001435	Washer 4	2
26	10001186	Bearing 6204-2Z	2
27	40026068	Rotor	1
28	10001638	Circlips 20	1
29	10001636	Circlips 17	1
30	10000966	Water injection plug	1
31	10001468	Flat key 5x5x14	1
32	10001801	Plug line	1
33	10001289	Terminal block	2
34	10000990	Outlet nozzle PG13.5	1
35	10001583	Lock washer	1

Item No.	Part Code	Part Name	Qty
36	10001122	Lug	1
37	10001212	Spring washer 4	1
38	10010179	Screw M4x8	2
39	10004878	Pressure clamp	1
40	10010269	Screw M4x12	2
41	40017697	Terminal	1
42	10001134	Plug spring	3
43	10002560	Flame retardant sheath	1
44	10009975	Screw M4x35	2
45	30034200	Nameplate	1
46	10001386	Rivet 2x4	2
47	40014320	Cover box	1
48	10010501	Capacitor 40uF 450V	1
49	10000522	O-ring 40x3.1	1