CSPEF Type 1
CSPEF100, CSPEF150, CSPEF250
CSPEF400 75, CSPEF400 100, CSPEF400 150,
CSPEF400H 100, CSPEF400H 150

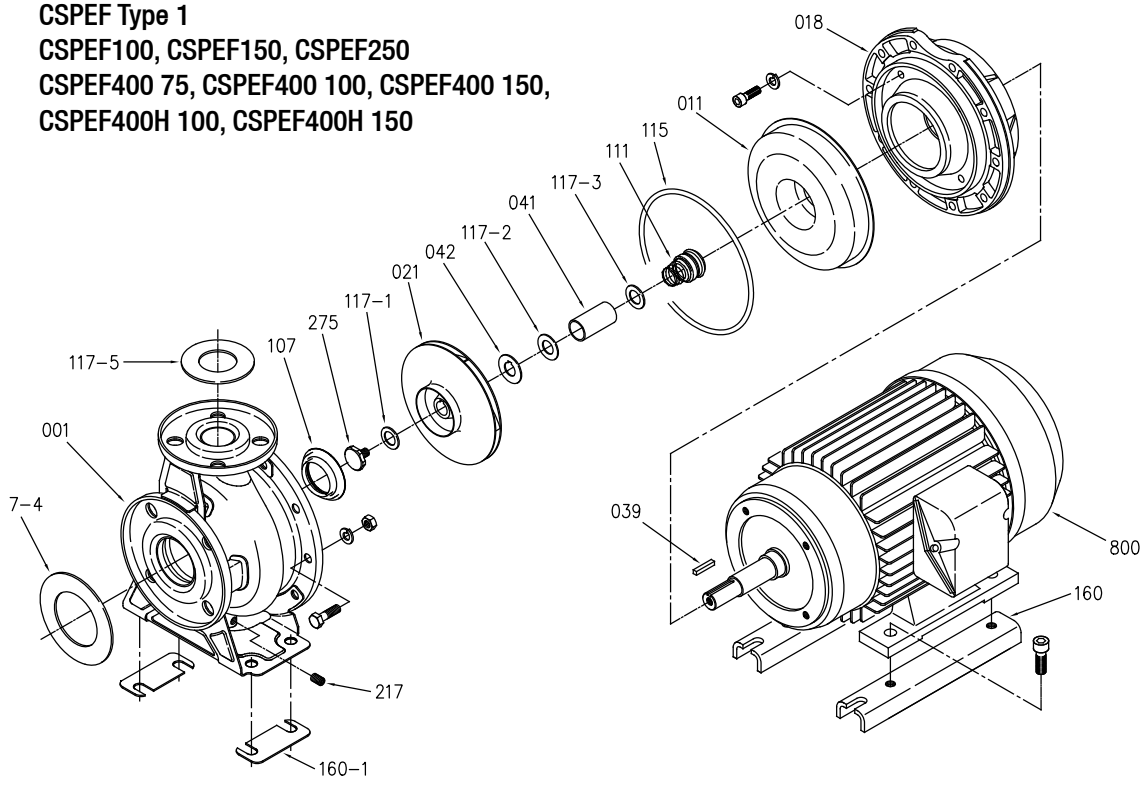

Part No.	Part Name	Materials
001	Casing	304L Stainless
011	Casing Cover	304L Stainless
018	Bracket	Cast Iron
021	Impeller	304L Stainless
039	Key	304L Stainless
041	Shaft Sleeve	304L Stainless
042	Impeller Spacer	304L Stainless
107	Liner Ring	304L Stainless + PTFE
111	Mechanical Seal	varies by model
115	O-Ring	Viton/EPDM
117-1	Gasket	Nylon
117-2	Gasket	Nylon
117-3	Gasket	Nylon
117-4	Suction Flange Gasket (2)	EPDM
117-5	Discharge Flange Gasket (2)	NBR/EPDM
160	Motor Support (2)	Steel
160-1	Casing Support (2)	Steel
217	Drain Plug	304L Stainless
275	Impeller Bolt	304L Stainless
800	Motor	–

Pump will use either motor supports or casing supports, depending on model.

CSPEF Type 2
CSPEF400 200
CSPEF400H 200

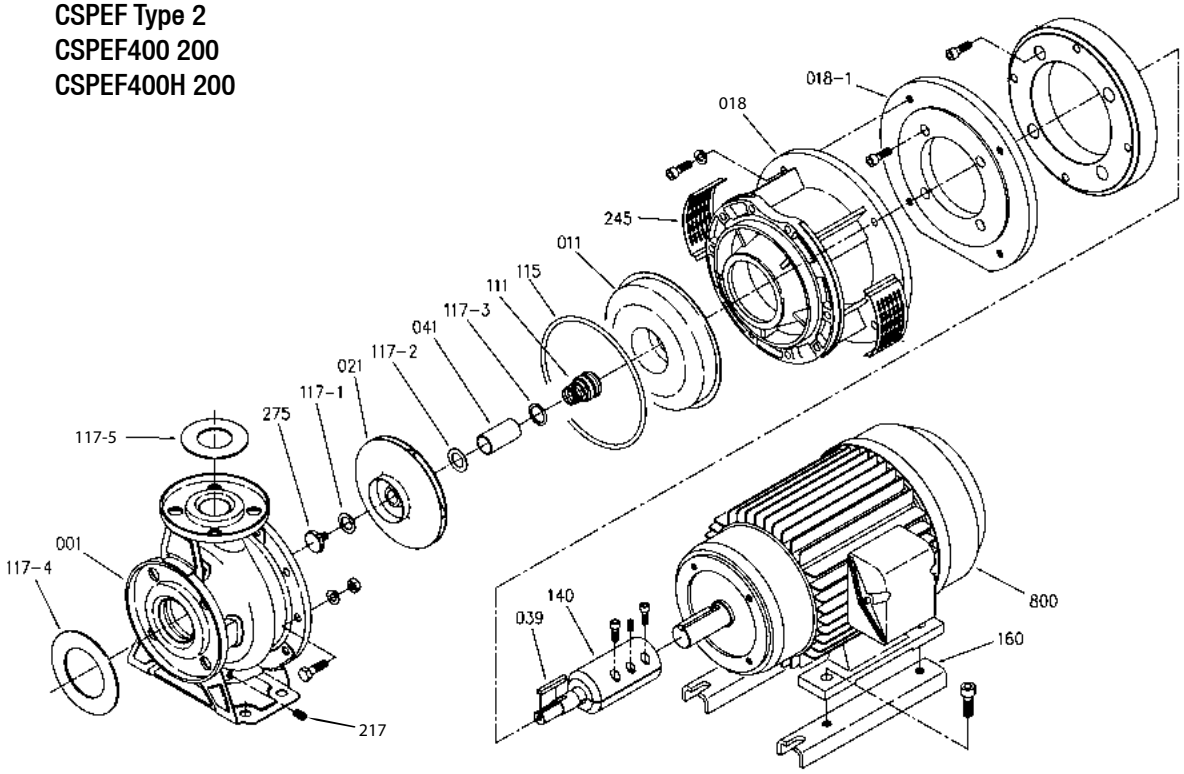

Part No.	Part Name	Materials
001	Casing	304 Stainless
003	Motor bracket	Cast Aluminum
004	Casing cover	304 Stainless
006	Shaft Extension	304 Stainless
007	Impeller	304 Stainless
008	Impeller	304 Stainless
009	Diffuser	304 Stainless
011	Mechanical Seal Type 21	Carbon/Ceramic
024	Priming plug/Drain plug (2)	304 Stainless
026	O-Ring	Viton
027	O-Ring	Viton
032	Key (2)	Stainless
034	Impeller nut	304 Stainless/Nylon
072	Casing ring	Viton
073	Casing ring	Viton
075	Washer (2)	304 Stainless
077	O-Ring (2)	Viton
079	Spacer diffuser	304 Stainless
102	Suction cover	304 Stainless
103	Conveyor cover	304 Stainless
105	Sleeve	304 Stainless

Model CSPEF 65 Type 3

CSPEF400H 200 256TC frame
CSPEF400 250 284TSC frame
CSPEF400HH 200 256TC frame
CSPEF400H 250 284TSC frame
CSPEF400 300 284TSC frame

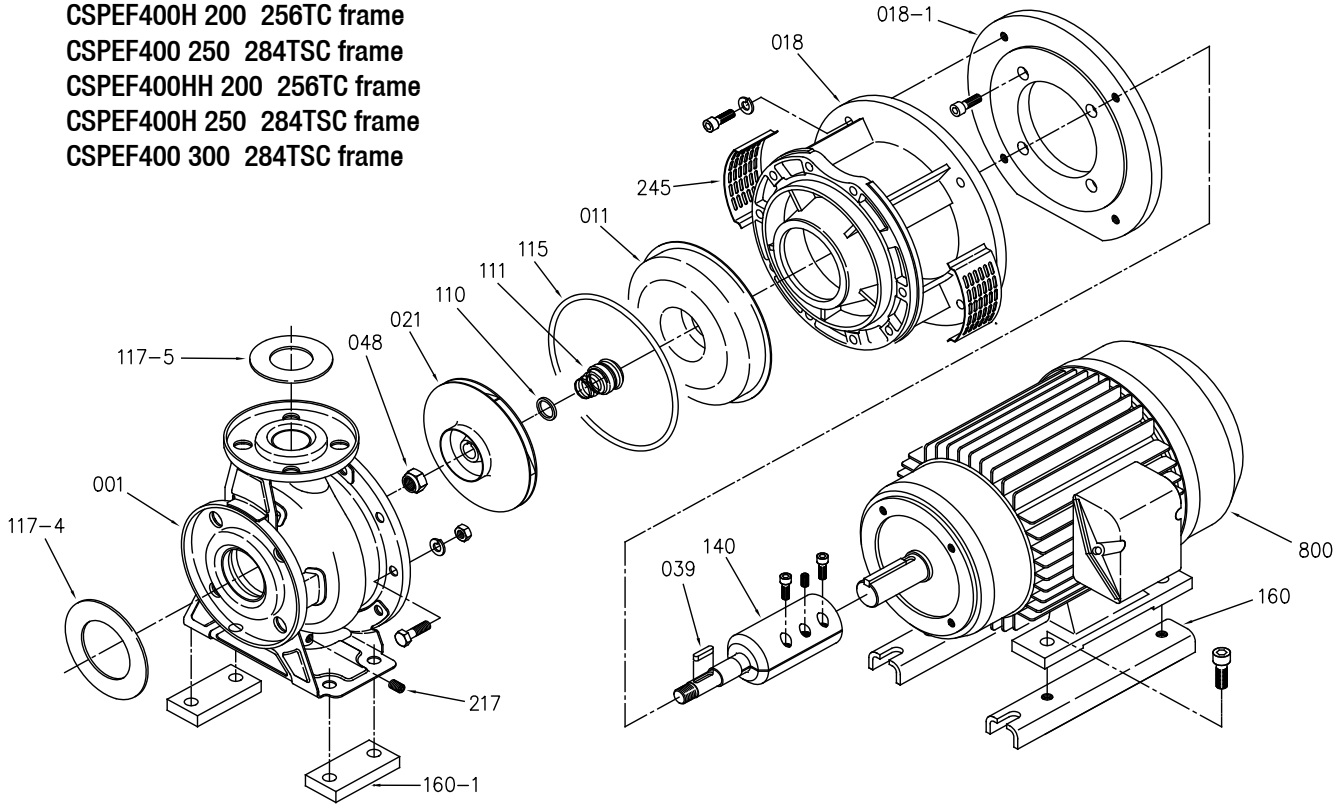

Part No.	Part Name	Materials
001	Casing	304L Stainless
011	Casing Cover	304L Stainless
018	Bracket	Cast Iron
018-1	Adapter Ring	Cast Iron
021	Impeller	304L Stainless
039	Key	304L Stainless
048	Impeller Nut	Stainless Steel
110	Lip Seal	304L Stainless
111	Mechanical Seal	varies by model
115	O-Ring	Viton/EPDM
117-4	Suction Flange Gasket (2)	EPDM
117-5	Discharge Flange Gasket (2)	NBR/EPDM
140	Coupling	304L Stainless
160	Motor Support (2)	Steel
160-1	Casing Support (2)	Steel
217	Drain Plug	304L Stainless
245	Coupling Guard (2)	Stainless Steel
800	Motor	–