IRONJET
Spare Parts



Parts Designation IRONJ 05

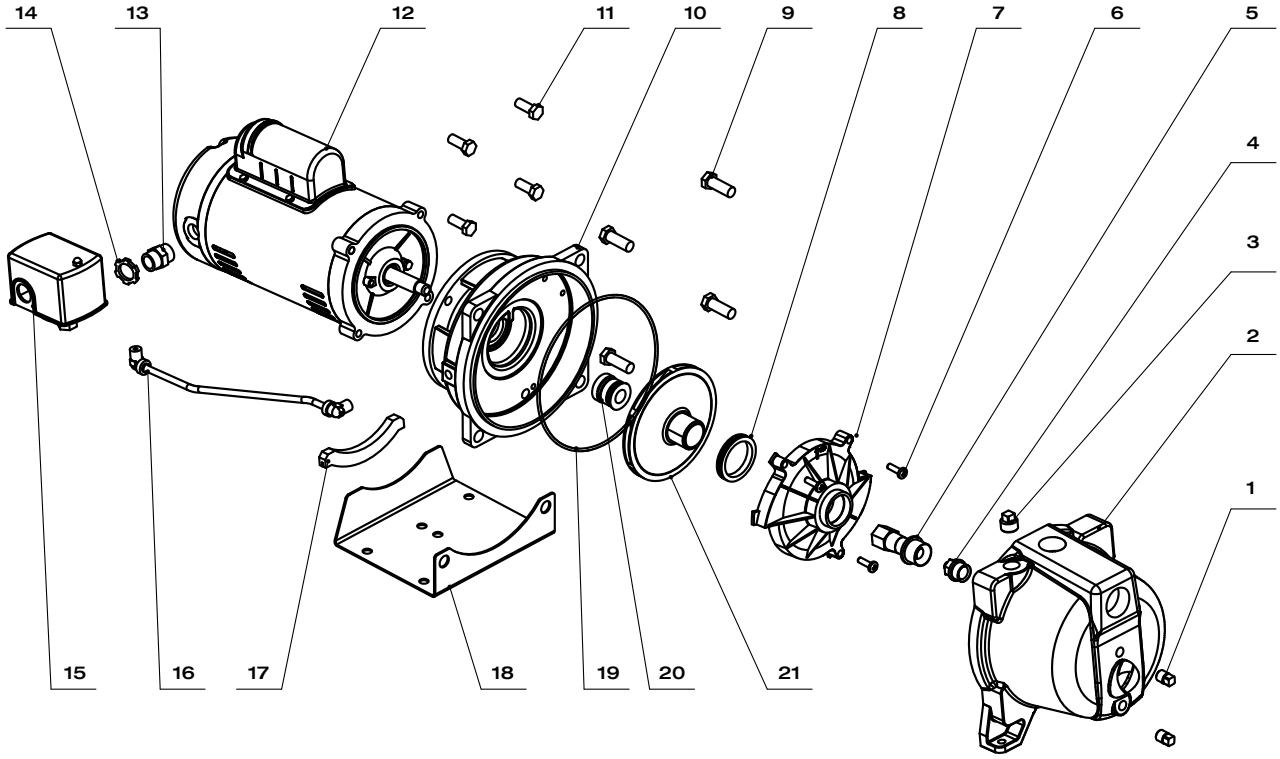

1	N201011010	Pipe Plug - 1/4”NPT
2	N203020031	Pump casing
3	N201011020	1/2”NPT Pipe Plug
4	N204051010	Nozzle
5	N204052010	Venturi
6	M201033021	Screws for diffuser
7	N204030010	Diffuser
8	N202020030	Seal Ring
9	M103063010	Hexagon Bolt - M12x30
10	N203010026	Motor Bracket

11	M103113020	Hexagon bolt - 3/8-16UNCx22
12	P101012010	Motor
13	N201021010	Threaded joint - 1/2”NPSM
14	M302030010	Nut - 1/2”NPSM
15	N201042020	Pressure Switch/Pearl (20-40PSI)
16	N201061030	Tube Kit - 1/4”NPT
17	N202030020	Gasket
18	N205010020	160U Connecting Seat
19	N202010010	O-Ring
20	H402051010	Mechanical Seal
21	N204040010	Impeller

IRONJET
Spare Parts



Parts Designation IRONJH 05

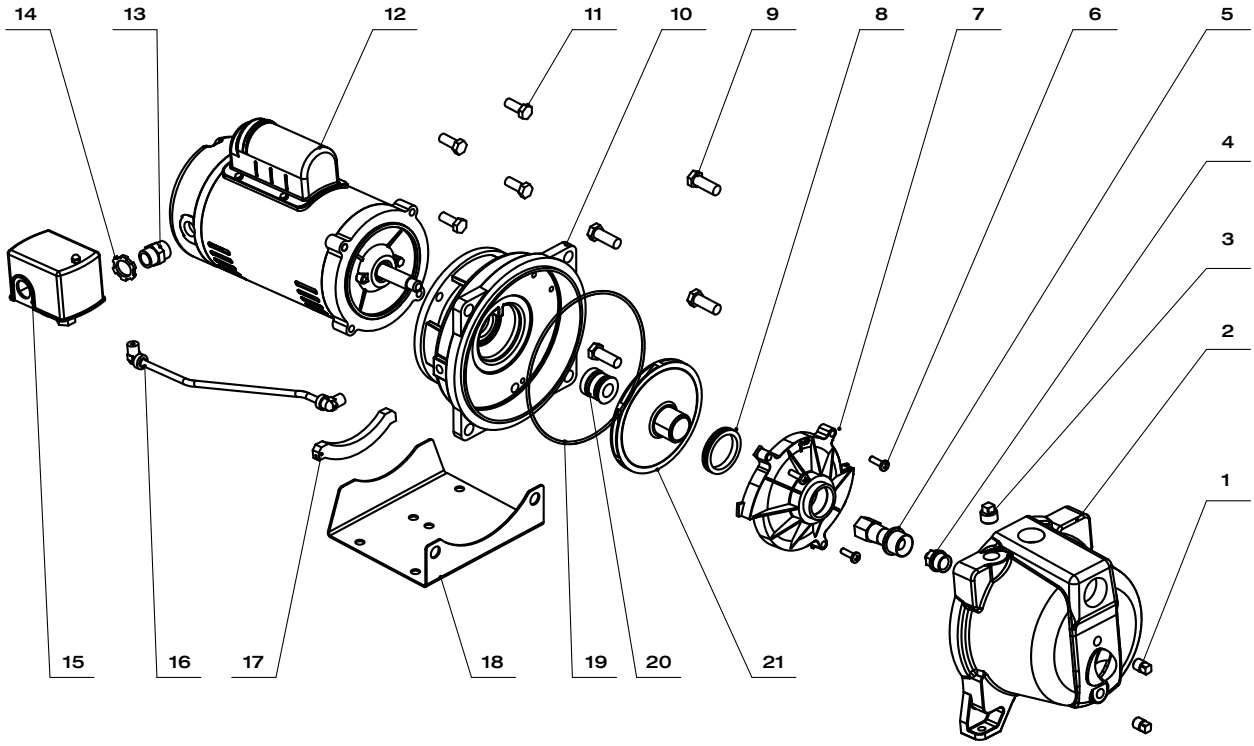

1	N201011010	Pipe Plug - 1/4”NPT
2	N203020031	Pump casing
3	N201011020	1/2”NPT Pipe plug
4	N204051070	Nozzle
5	N204052120	Venturi
6	M201033021	Screws for diffuser
7	N204030010	Diffuser
8	N202020030	Seal Ring
9	M103063010	Hexagon Bolt - M12x30
10	N203010026	Motor Bracket

11	M103113020	Hexagon bolt - 3/8-16UNCx22
12	P101012010	Motor
13	N201021010	Threaded joint - 1/2”NPSM
14	M302030010	Nut - 1/2”NPSM
15	N201042020	Pressure Switch/Pearl (30-50PSI)
16	N201061020	Tube Kit - 1/4”NPT
17	N202030020	Gasket
18	N205010020	160U Connecting Seat
19	N202010010	O-Ring
20	H402051010	Mechanical Seal
21	N204040010	Impeller

IRONJET
Spare Parts



Parts Designation IRONJ 07

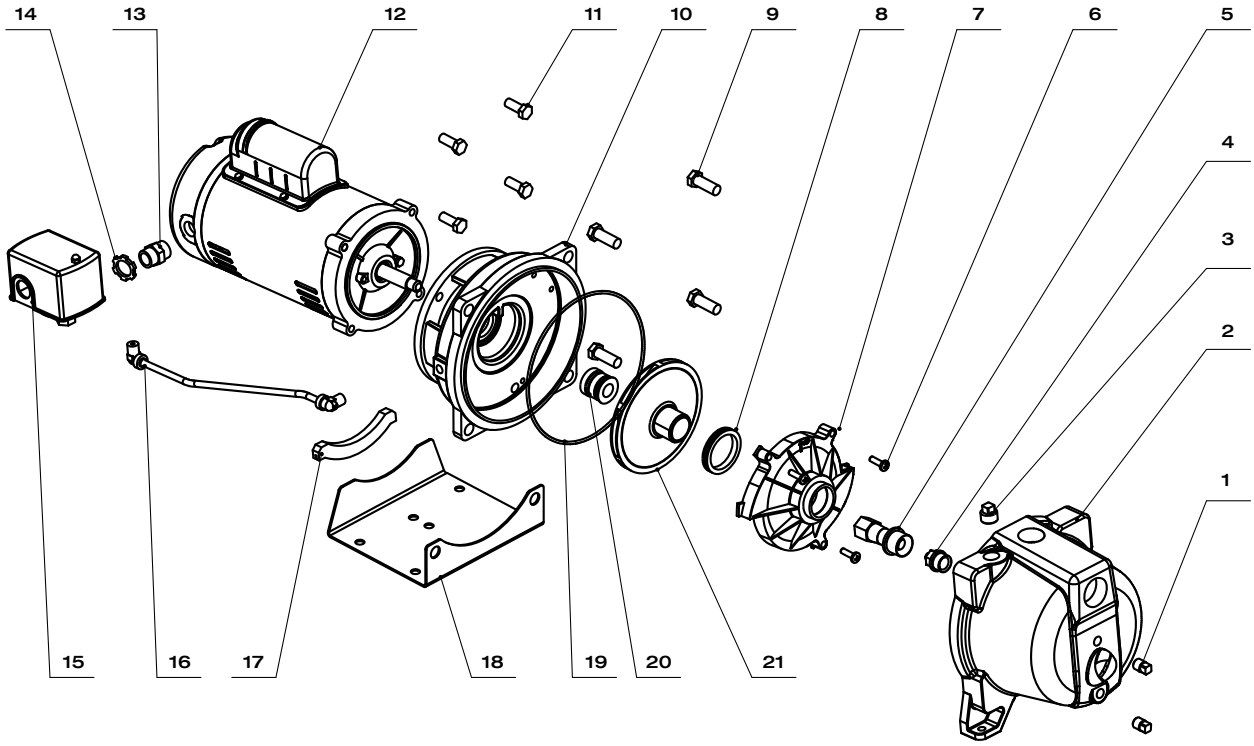

1	N201011010	Pipe Plug - 1/4”NPT
2	N203020031	Pump casing
3	N201011020	1/2”NPT Pipe Plug
4	N204051050	Nozzle
5	N204052100	Venturi
6	M201033011	Screws for diffuser
7	N204030020	Diffuser
8	N202020030	Seal Ring
9	M103063010	Hexagon Bolt - M12x30
10	N203010026	Motor Bracket

11	M103113020	Hexagon bolt - 3/8-16UNCx22
12	P101012020	Motor
13	N201021010	Threaded joint - 1/2”NPSM
14	M302030010	Nut - 1/2”NPSM
15	N201042021	Pressure Switch/Pearl (30-50PSI)
16	N201061030	Tube Kit - 1/4”NPT
17	N202030020	Gasket
18	N205010020	160U Connecting Seat
19	N202010010	O-Ring
20	H402051010	Mechanical Seal
21	N204040020	Impeller

IRONJET
Spare Parts



Parts Designation IRONJ 10

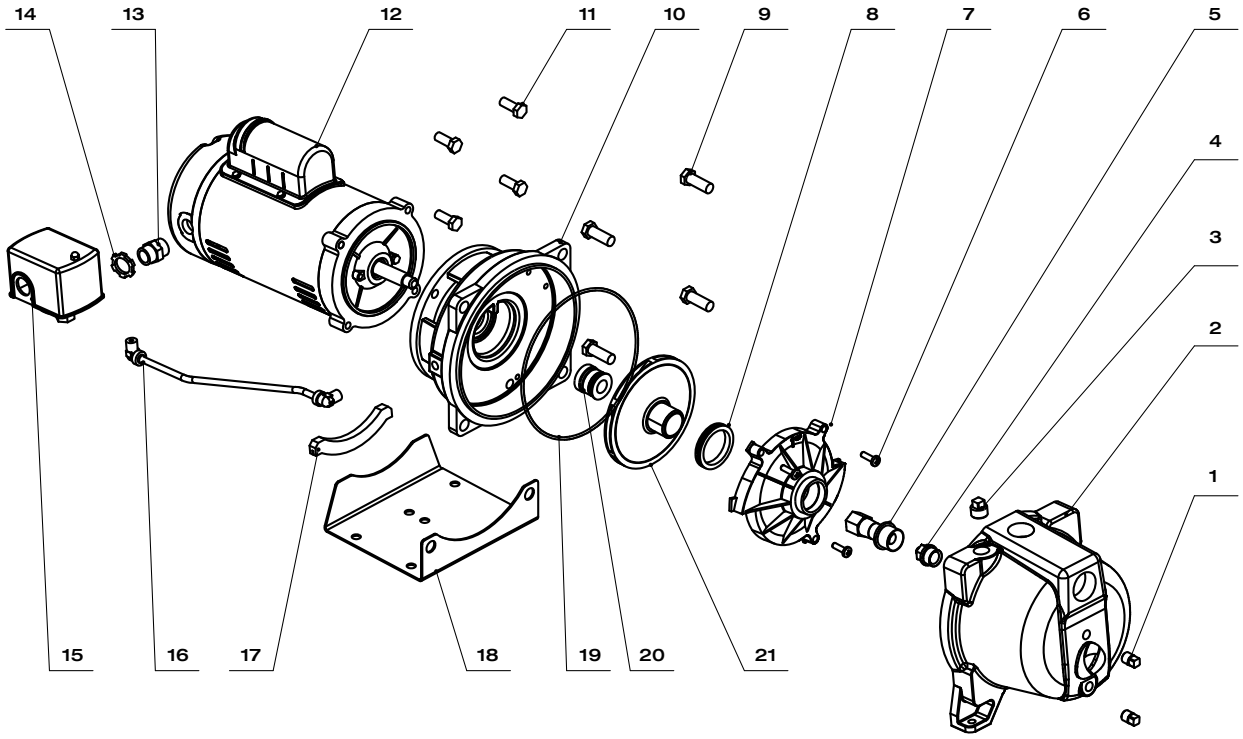

1	N201011010	Pipe Plug - 1/4”NPT
2	N203020031	Pump casing
3	N201011020	1/2”NPT Pipe Plug
4	N204051050	Nozzle
5	N204052110	Venturi
6	M201033011	Screws for diffuser
7	N204030020	Diffuser
8	N202020030	Seal Ring
9	M103063010	Hexagon Bolt - M12x30
10	N203010026	Motor Bracket

11	M103113020	Hexagon bolt - 3/8-16UNCx22
12	P107010010	Motor
13	N201021010	Threaded joint - 1/2”NPSM
14	M302030010	Nut - 1/2”NPSM
15	N201042021	Pressure Switch/Pearl (30-50PSI)
16	N201061030	Tube Kit - 1/4”NPT
17	N202030030	Gasket
18	N205010020	160U Connecting Seat
19	N202010010	O-Ring
20	H402051010	Mechanical Seal
21	N204040050	Impeller

IRONJET
Spare Parts



Parts Designation IRONJ 15

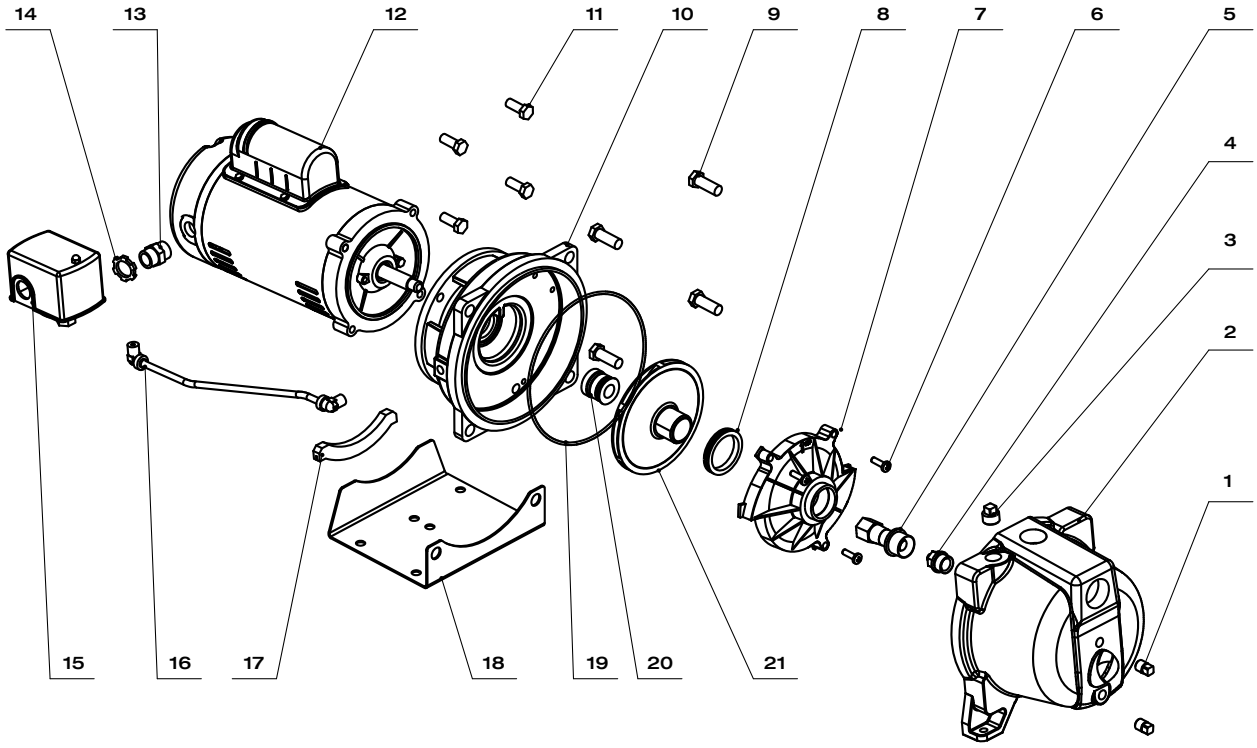

1	N201011010	Pipe Plug - 1/4”NPT
2	N203020031	Pump casing
3	N201011020	1/2”NPT Pipe Plug
4	N204051060	Nozzle
5	N204052080	Venturi
6	M201033021	Screws for diffuser
7	N204030030	Diffuser
8	N202020030	Seal Ring
9	M103063010	Hexagon Bolt - M12x30
10	N203010026	Motor Bracket
11	M103113020	Hexagon bolt - 3/8-16UNCx22

12	P107010020	Motor
13	N201021010	Threaded joint - 1/2”NPSM
14	M302030010	Nut - 1/2”NPSM
15	N201042022	Pressure Switch/Pearl (30-50PSI)
16	N201061030	Tube Kit - 1/4”NPT
17	N202030030	Gasket
18	N205010020	160U Connecting Seat
19	N202010010	O-Ring
20	H402051010	Mechanical Seal
21	N204040060	Impeller