PEP 05A16L

Peripheral Pumps

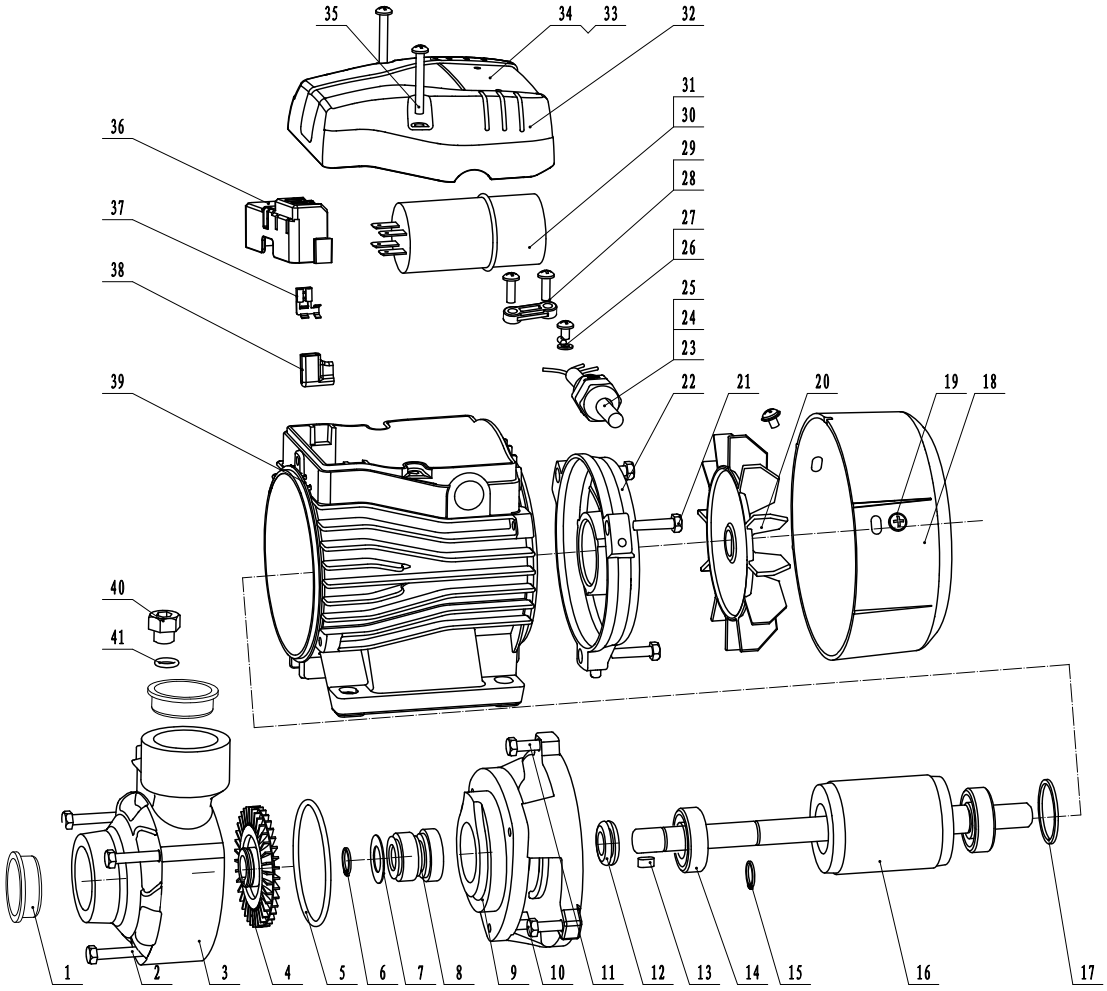

Item No.	Part Code	Part Name	Qty
1	40005372	Dust cap	2
2	10035460	Hexangular tie bolt	1
3	40048283	Pump body	1
4	40008430	Impeller	1
5	10000535	O-sealing ring	1
6	10001630	Circlip for shaft	1
7	10001433	Washer	1
8	10001260	Mechanical seal	1
9	40045676	Pump support	1
10	10035437	Hexangular tie bolt	1
11	10035436	Hexangular tie bolt	2
12	10001049	Water proof gland	1
13	10001464	Flat key	1
14	10001160	Ball bearing	2
15	10001629	Circlip for shaft	1
16	40024811	Rotor	1
17	10001137	Wave spring	1
18	40011912	Fan cover	1
19	10033436	Phillips pan screw	2
20	40005390	Fan	1
21	10001328	Hexangular tie bolt	1

Item No.	Part Code	Part Name	Qty
22	40011911	Rear cover	1
23	10001289	Lug	2
24	10000890	Outlet nozzle	1
25	10001786	Cable	1
26	10010179	Phillips pan screw	1
27	10001122	Cold compacting terminal	1
28	40018908	Cord clip	1
29	10009928	Phillips pan screw	2
30	10009953	Capacitor	1
31	10000512	O-sealing ring	1
32	40014230	Cover box	1
33	30026353	Nameplate	1
34	10001386	Plate rivet	2
35	10009928	Phillips pan screw	1
36	40014243	Wire holder	1
37	10001134	Plug spring	1
38	10002560	Curved sheath	1
39	40045716	Stator	1
40	10031344	Filling plug	1
41	10000547	O-sealing ring	1

PEP 07A16S

Peripheral Pumps

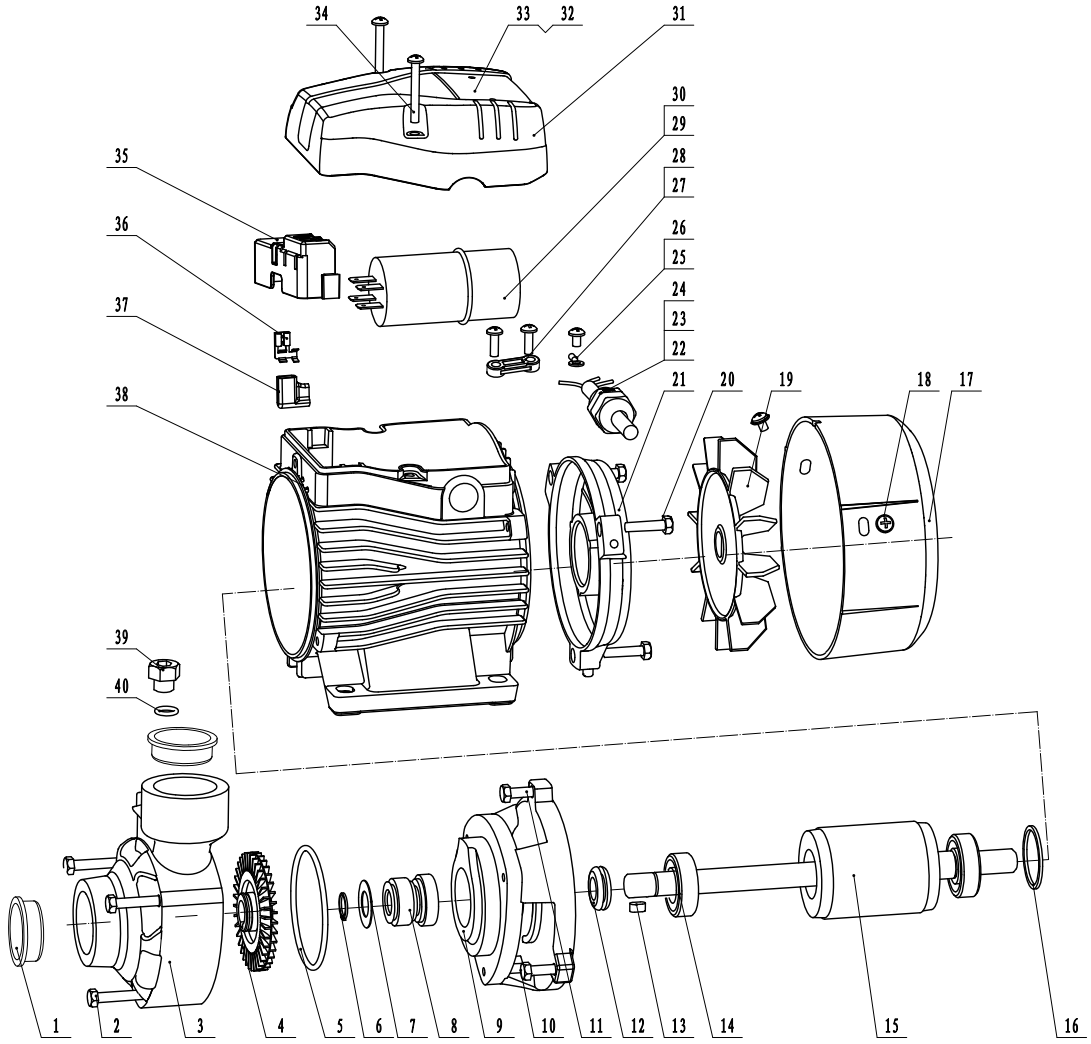

Item No.	Part Code	Part Name	Qty
1	40005372	Dust Cap	2
2	10035469	Hexangular Tie Bolt	1
3	40048344	Pump Body	1
4	10008428	Impeller	1
5	10000539	O-Sealing Ring	1
6	10001630	Circlip for Shaft	1
7	10001433	Washer	1
8	10001260	Mechanical Seal	1
9	40047521	Pump Support	1
10	10035437	Hexangular Tie Bolt	1
11	10035438	Hexangular Tie Bolt	2
12	10001049	Water Proof Gland	1
13	10001464	Flat Key	1
14	10001169	Ball Bearing	2
15	40025277	Rotor	1
16	10004846	Wave Spring D35	1
17	40013649	Fan Cover	1
18	10033436	Phillips Pan Screw	2
19	40005415	Fan	1
20	10001329	Hexangular Tie Bolt	3

Item No.	Part Code	Part Name	Qty
21	40024899	Rear Cover	1
22	10001289	Lug	2
23	10000889	Outlet Nozzle	1
24	10001790	Cable	1
25	10010179	Phillips Pan Screw	1
26	10001122	Cold Compacting Terminal	1
27	10010269	Phillips Pan Screw	1
28	40018908	Cord Clip	1
29	10009952	Capacitor	1
30	10010032	O-Sealing Ring	1
31	40014262	Cover Box	1
32	30040831	Nameplate	1
33	10001386	Plate Rivet	2
34	10009928	Phillips Pan Screw	1
35	40017434	Wire Holder	1
36	10001134	Plug Spring	1
37	10002560	Curved Sheath	1
38	40046637	Stator	1
39	10000547	O-Sealing Ring	1
40	10031344	Filling Plug	1

PEP 10F16S

Peripheral Pumps

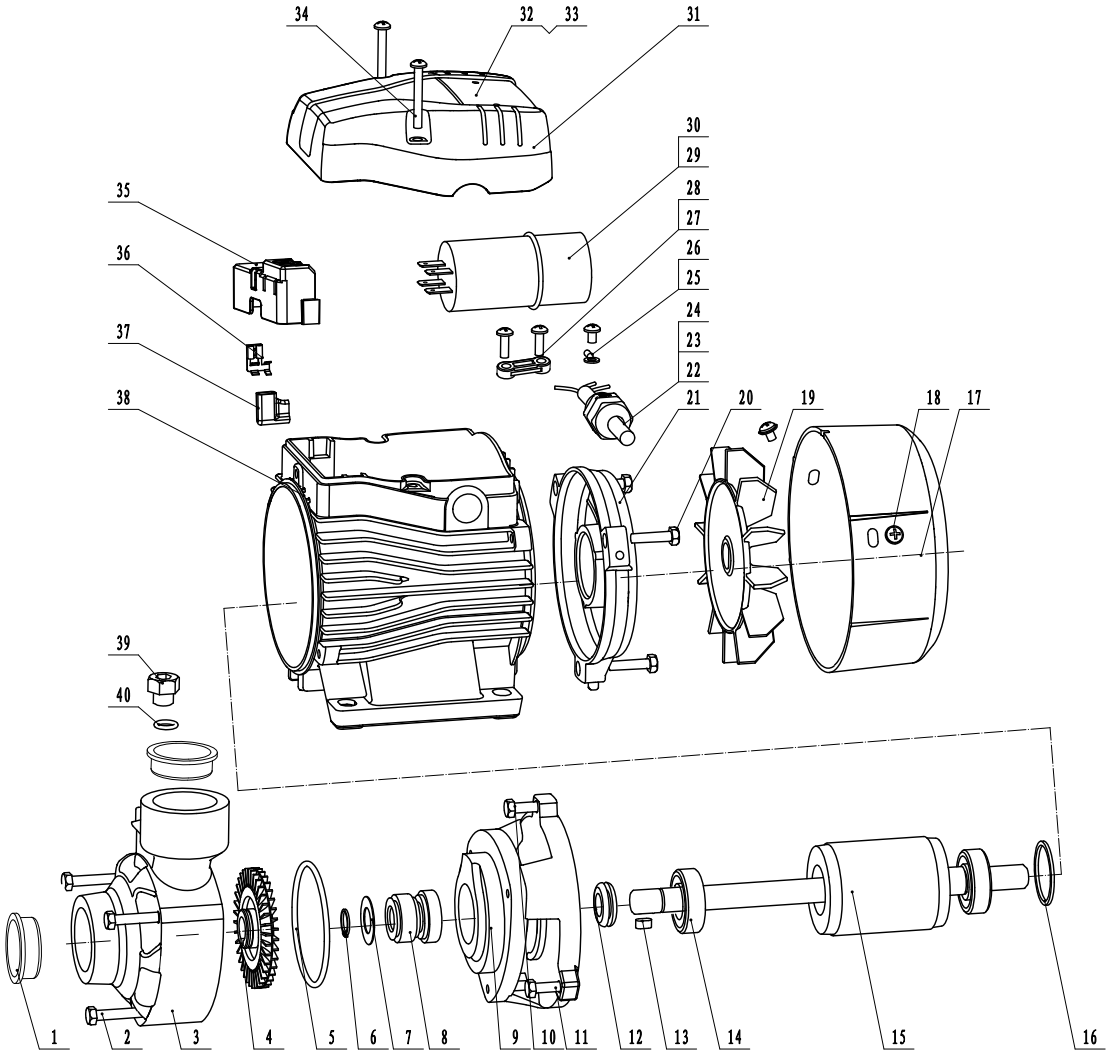

Item No.	Part Code	Part Name	Qty
1	40005372	Dust Cap	2
2	10035469	Hex Bolt	1
3	40048345	Pump Body	1
4	40008429	Impeller	1
5	10000543	O-Ring	1
6	10001630	Circlip	1
7	10001433	Washer	1
8	10001260	Mechanical Seal	1
9	40046793	Pump Support	1
10	10035437	Hex Bolt	1
11	10035438	Hex Bolt	2
12	10001049	Water Proof Gland	1
13	10001464	Flat Key	1
14	10001169	Bearing	2
15	40025275	Rotor	1
16	10004846	Wave Spring	1
17	40013649	Fan Cover	1
18	10033436	Phillips Screw	2
19	40005415	Fan	1
20	10001329	Hex Bolt	3

Item No.	Part Code	Part Name	Qty
21	40024899	Rear Cover	1
22	10001289	Lug	2
23	10000889	Outlet Nozzle	1
24	10001790	Cable	1
25	10010179	Phillips Screw	1
26	10001122	Terminal	1
27	10010269	Phillips Screw	1
28	40018908	Cord Clip	1
29	10009955	Capacitor	1
30	10010032	O-Ring	1
31	40014262	Cover Box	1
32	30026398	Nameplate	1
33	10001386	Plate Rivet	2
34	10009928	Phillips Screw	1
35	40017434	Wire Holder	1
36	10001134	Plug Spring	1
37	10002560	Curved Sheath	1
38	40046648	Stator	1
39	10031344	Filling Plug	1
40	10000547	O-Ring	1

PEP 15C16S

Peripheral Pumps

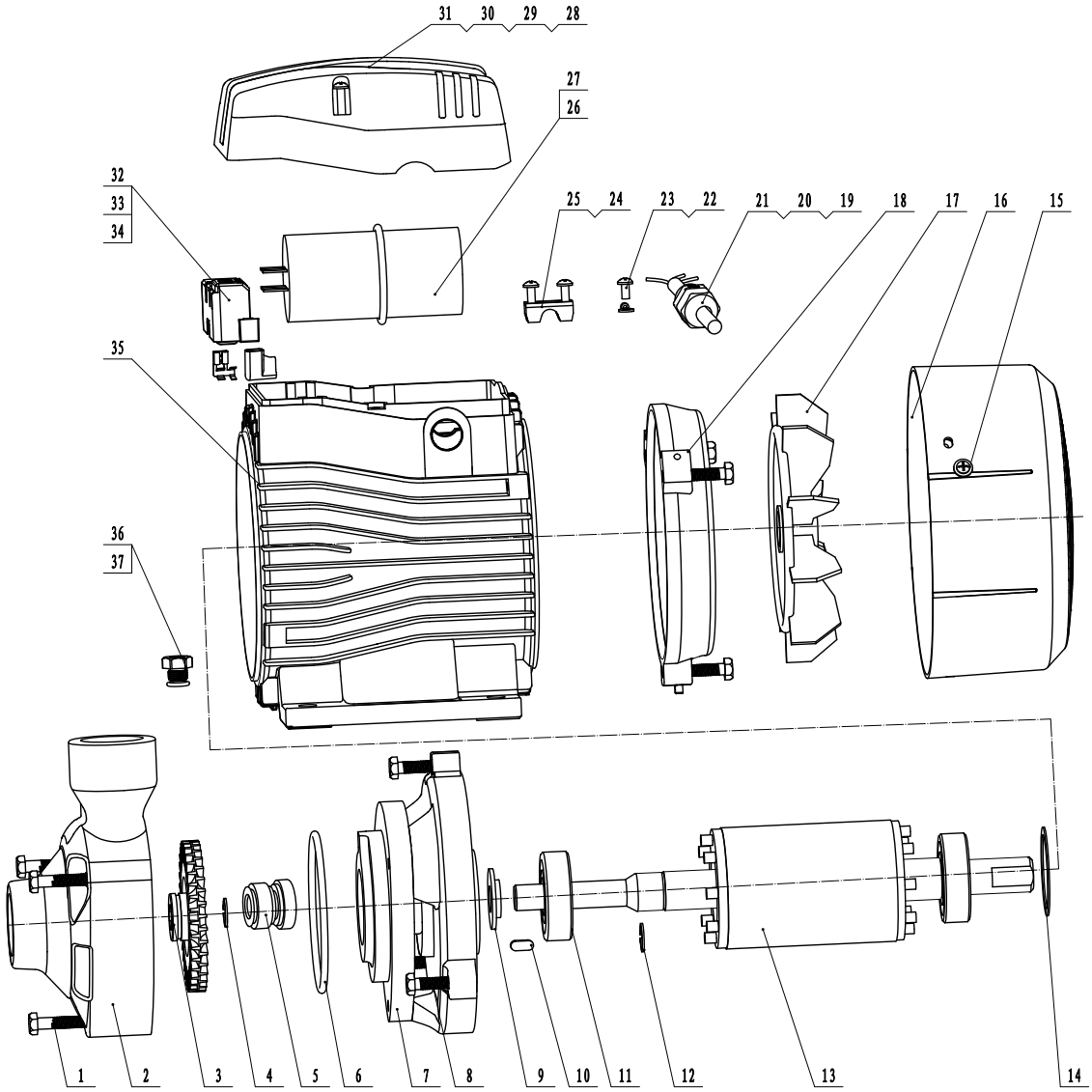

Item No.	Part Code	Part Name	Qty
1	10014693	Hexangular tie bolt	3
2	40017770	Pump body	1
3	10010280	Impeller	1
4	10001632	Circlip for shaft	1
5	10010281	Mechanical seal	1
6	10010282	O-sealing ring	1
7	40015011	Pump support	1
8	10001342	Hexangular tie bolt	6
9	10000961	Water proof gland	1
10	10001463	Washer	1
11	10001186	Ball bearing	2
12	10001638	Circlip for shaft	1
13	40025593	Rotor	1
14	10001140	Wave spring	1

Item No.	Part Code	Part Name	Qty
15	10033436	Phillips pan self-drilling screw	1
16	40014321	Fan cover	1
17	40003266	Fan	1
18	40014323	Rear cover	1
19	10001289	Lug	1
20	10000889	Outlet nozzle	1
21	10001799	Cable	1
22	10010179	Phillips pan self-drilling screw	1
23	10001122	Cold compacting terminal	1
24	10010269	Phillips pan self-drilling screw	2
25	10004878	Cord clip	1
26	10010501	Capacitor	1
27	10000522	O-sealing ring	1

Item No.	Part Code	Part Name	Qty
28	30028612	Nameplate	1
29	10001386	Rivet	1
30	40014320	Cover box	1
31	10009975	Phillips pan self-drilling screw	2
32	40017697	Wire holder	1
33	10001134	Plug spring	1
34	10002560	Curved sheath	1
35	40025595	Stator	1
36	10000547	O-sealing ring	1
37	10031344	Filling plug	1

PEP 20C16S

Peripheral Pumps

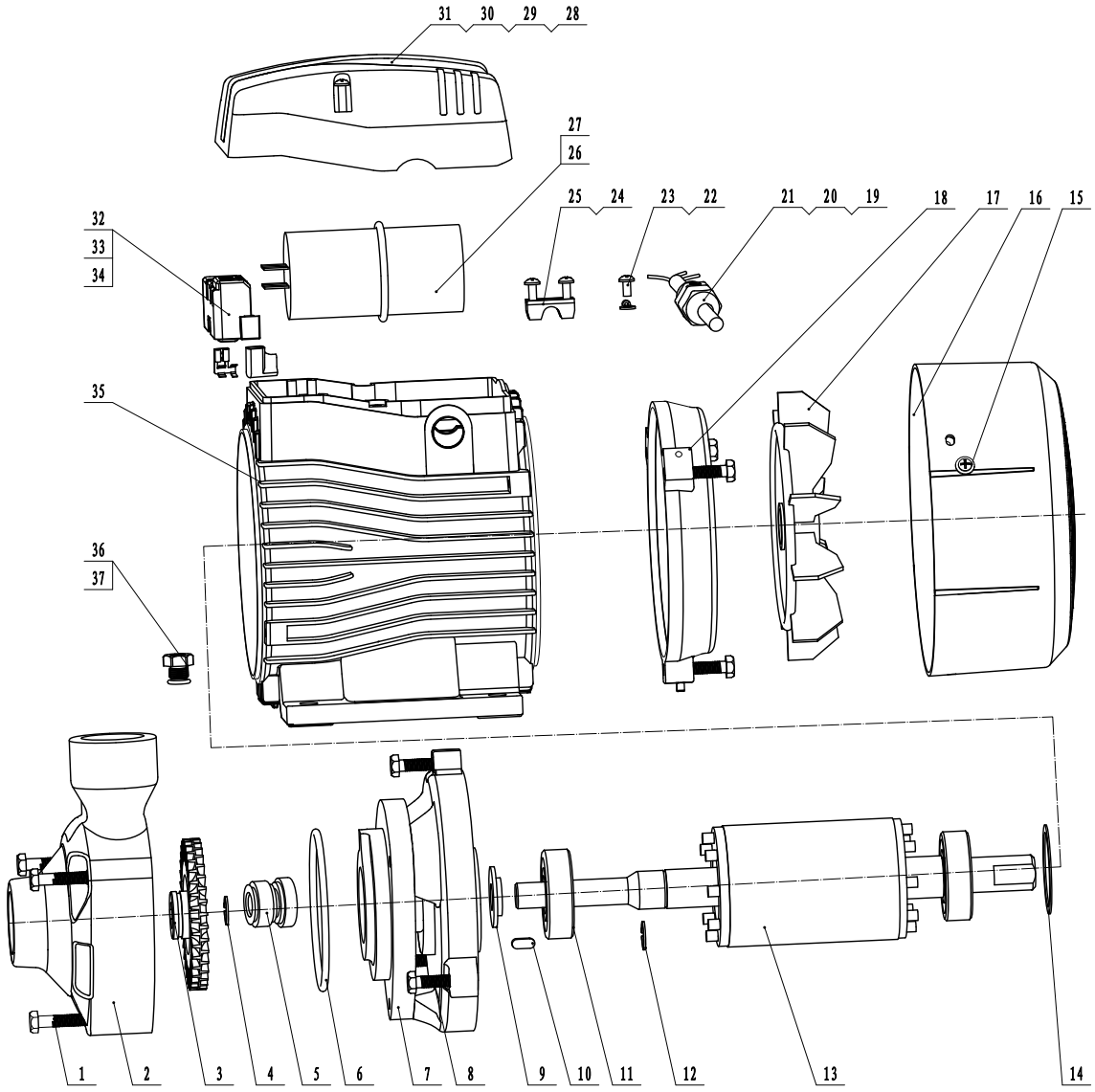

Item No.	Part Code	Part Name	Qty
1	10014693	Hexangular tie bolt	1
2	40017771	Pump body	1
3	10010280	Impeller	1
4	10001632	Circlip for shaft	1
5	10010281	Mechanical seal	1
6	10010282	O-sealing ring	1
7	40014712	Pump support	1
8	10001342	Hexangular tie bolt	6
9	10000961	Water proof gland	1
10	10001463	Washer	1
11	10001186	Ball bearing	2
12	10001638	Circlip for shaft	1
13	40025598	Rotor	1
14	10001140	Wave spring	1
15	10033436	Phillips pan self-drilling screw	1

Item No.	Part Code	Part Name	Qty
16	40014321	Fan cover	1
17	40003266	Fan	1
18	40014323	Rear cover	1
19	10001289	Lug	1
20	10000889	Outlet nozzle	1
21	10001799	Cable	1
22	10010179	Phillips pan self-drilling screw	1
23	10001122	Cold compacting terminal	1
24	10010269	Phillips pan self-drilling screw	2
25	10004878	Cord clip	1
26	10012687	Capacitor	1
27	10000522	O-sealing ring	1
28	30027173	Nameplate	1
29	10001386	Rivet	1

Item No.	Part Code	Part Name	Qty
30	40014320	Cover box	1
31	10009975	Phillips pan self-drilling screw	2
32	40017697	Wire holder	1
33	10001134	Plug spring	1
34	10002560	Curved sheath	1
35	40025600	Stator	1
36	10000547	O-sealing ring	1
37	10031344	Filling plug	1