

THOR

Centrifugal sprinkler Pumps

Parts Designation THOR 10

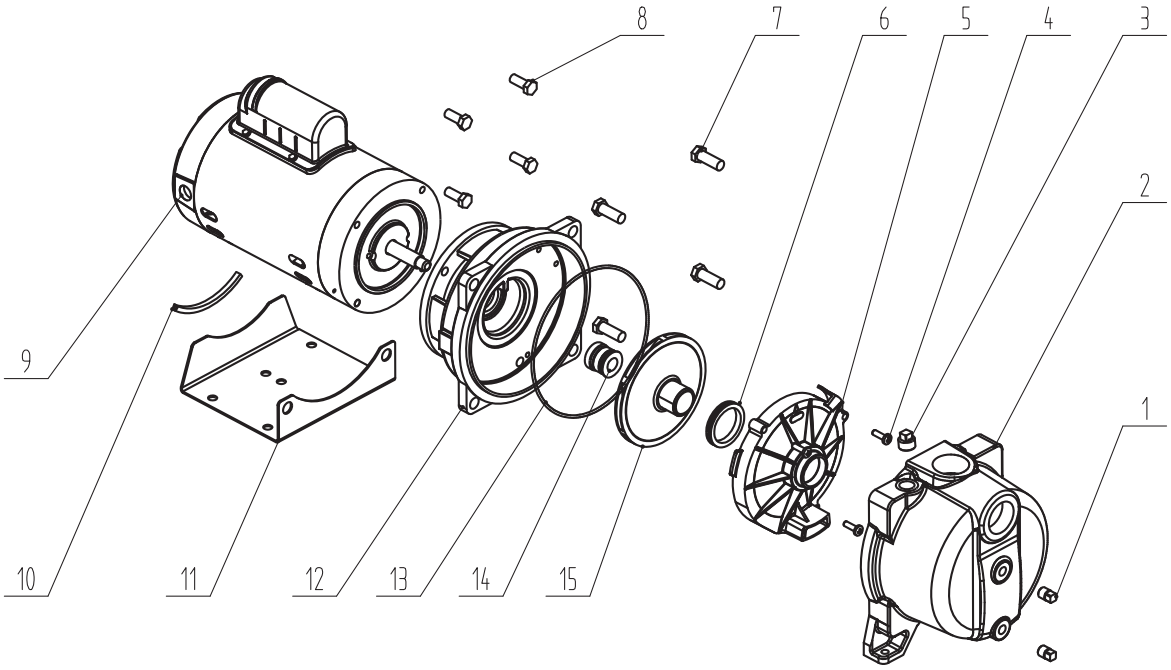

1	N201011010	1/4”NPT Pipe plug
2	N306000040	Pump casing
3	N201011020	1/2”NPT Pipe plug
4	M201033011	Screws for diffuser
5	N204030050	Diffuser
6	N202020030	CJS Seal ring
7	M103063010	M12x30 Hexagon bolt
8	M103113020	3/8-16UNCx22 Hexagon bolt
9	P107010010	M/Motor
10	N202030030	Gasket

11	N205010020	160U Connecting Seat
12	N203010024	Connecting Seat
13	N202010010	O-Ring
14	H402051010	Mechanical seal
15	N204040080	Impeller

Pearl®



THOR

Centrifugal sprinkler Pumps

Parts Designation THOR 15

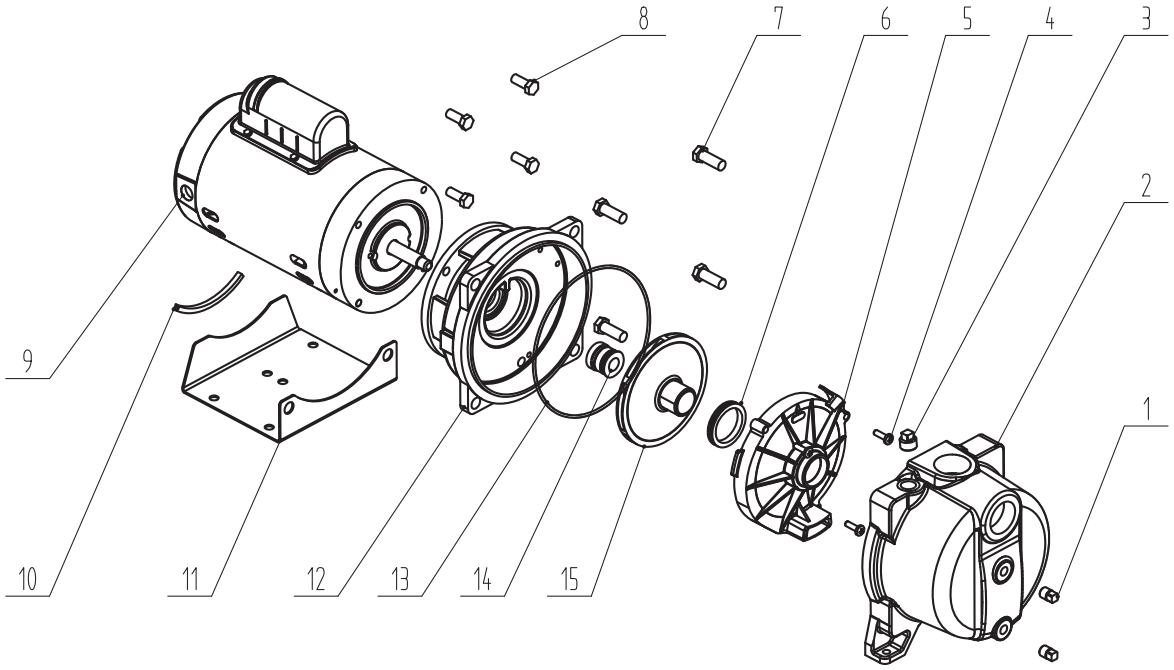

1	N201011010	1/4”NPT Pipe Plug
2	N306000040	Pump casing
3	N201011020	1/2”NPT Pipe Plug
4	M201033021	Screws for diffuser
5	N204030060	Diffuser
6	N202020030	CJS Seal ring
7	M103063010	M12x30 Hexagon bolt
8	M103113020	3/8-16UNCx22 Hexagon bolt
9	P107010020	M/Motor
10	N202030030	Gasket

11	N205010020	160U Connecting Seat
12	N203010024	Connecting Seat
13	N202010010	O-Ring
14	H402051010	Mechanical seal
15	N204040070	Impeller



THOR

Centrifugal sprinkler Pumps

Parts Designation THOR 20

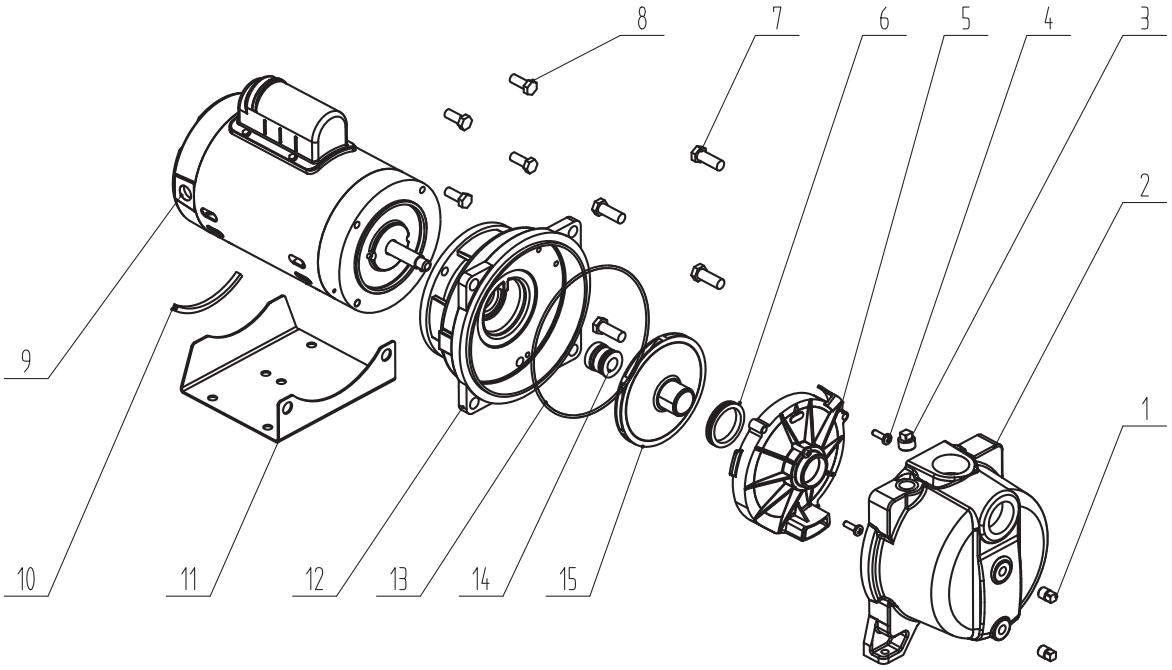

1	N201011010	1/4”NPT Pipe Plug
2	N306000040	Pump casing
3	N201011020	1/2”NPT Pipe Plug
4	M201033021	Screws for diffuser
5	N204030060	Diffuser
6	N202020030	CJS Seal ring
7	M103063010	M12x30 Hexagon bolt
8	M103113020	3/8-16UNCx22 Hexagon bolt
9	P107010030	M/Motor
10	N202030030	Gasket

11	N205010020	160 U Connecting Seat
12	N203010024	Connecting Seat
13	N202010010	O-Ring
14	H402051010	Mechanical seal
15	N204040090	Impeller