STA-RITE®

TWO POSITION SLIDE VALVE FOR POOL FILTERS

OWNER'S MANUAL

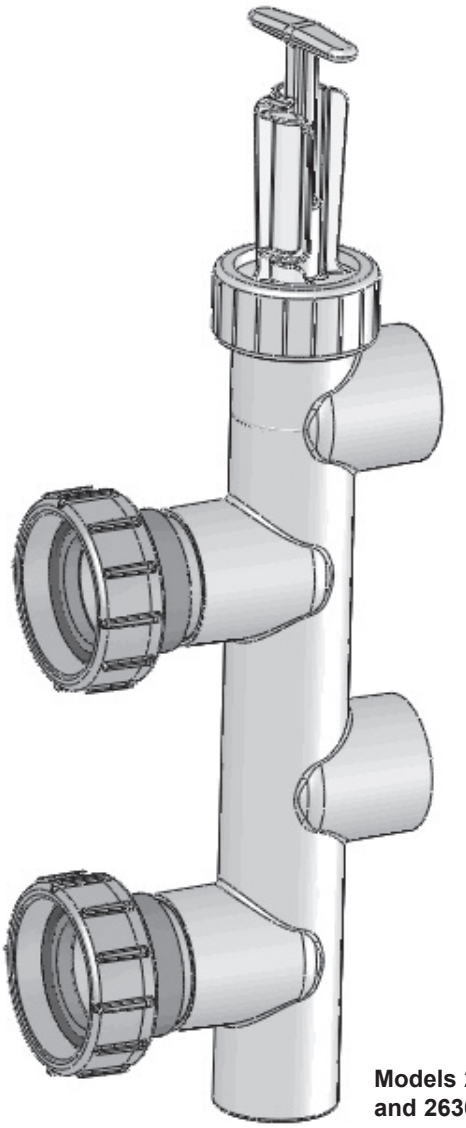

This manual should be given to the user of this valve.

Models 263053 and 263078

Technical Support (800) 831-7133

1620 Hawkins Ave., Sanford, NC 27330 • (919) 566-8000
10951 West Los Angeles Ave., Moorpark, CA 93021 • (805) 553-5000

All indicated Pentair trademarks and logos are property of Pentair. Third party registered and unregistered trademarks and logos are the property of their respective owners.

© 2024 Pentair. All rights reserved. WWW.PENTAIR.COM

270163.D 4/23/24

TWO POSITION SLIDE VALVE

To avoid unneeded service calls, prevent possible injuries, and get the most out of your filter, READ THIS MANUAL CAREFULLY!

Table of Contents

Safety Instructions 2
Outline Dimensions 3
General Information 3
Operation 4
Maintenance 4
Repair Parts List 5
Performance Curves 6

READ AND FOLLOW ALL INSTRUCTIONS!

⚠ **This is the safety alert symbol. When you see this symbol on your system or in this manual, look for one of the following signal words and be alert to the potential for personal injury.**

⚠ DANGER warns about hazards that **will** cause death, serious personal injury, or major property damage if ignored.

⚠WARNING warns about hazards that **can** cause death, serious personal injury, or major property damage if ignored.

⚠ CAUTION warns about hazards that **will** or **can** cause minor personal injury or property damage if ignored.

NOTICE indicates special instructions not related to hazards.

Carefully read and follow all safety instructions in this manual and on equipment. Keep safety labels in good condition; replace if missing or damaged.

⚠WARNING
Hazardous pressure

Incorrectly installed or tested equipment may fail, causing severe injury or property damage.
Read and follow instructions in owner's manual when installing and operating equipment. Have a trained pool professional perform all pressure tests.

1. Do not connect system to a high pressure or city water system.
2. Use equipment only in a pool or spa installation.
3. Trapped air in system can cause explosion. BE SURE all air is out of system before operating or testing equipment.

Before pressure testing, make the following safety checks:

- Check all clamps, bolts, lids, and system accessories before testing.
- Release all air in system before testing.
- Tighten Sta-Rite trap lids to 30 ft. lbs. (4.1 kg-cm) torque for testing.
- Water pressure for test must be less than 25 PSI (172 kPa).
- Water Temperature for test must be less than 100° F. (38° C).
- Limit test to 24 hours. After test, visually check system to be sure it is ready for operation. Remove trap lid and retighten hand tight only.

  NOTICE: These parameters apply to Sta-Rite® equipment only. For non-Sta-Rite equipment, consult manufacturer.

OUTLINE DIMENSIONS

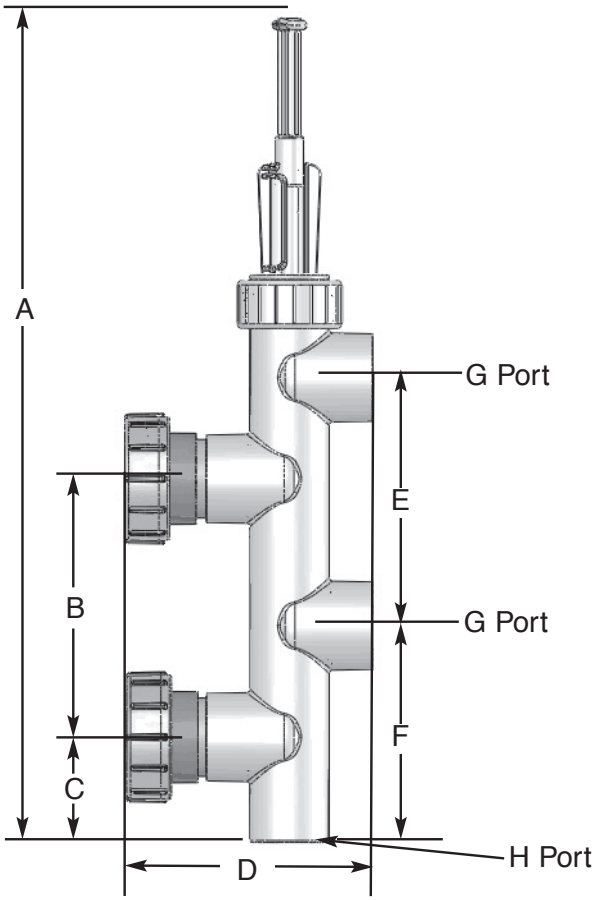

Model No.	Size	A	B	C	D	E	F	G Port	H Port
263053	2	24.4	7.81	3.25	7.4	7.5	6.6	2 Slip Femle	2 Slip Male
263078	2	24.4	7.81	3.25	7.6	7.5	6.6	2 Slip Femle	2 Slip Male

GENERAL

Valve P/N 263053 may be used with Sta-Rite D.E. or sand filters. Mating half of unions are shown on Table 1.
Valve P/N 263078 may be used with Sta-Rite D.E. or sand filters. See Table 2.

Connecting Plastic Slide Valve To Filter System

For Filters listed in Table 2, select correct clamp connector kit from the chart. Use with valve P/N 263078, 14821-0000, 14826-0000 and 14936-0000 (purchase separately).

TABLE 1

Sta-Rite Filters		
DE Filters		Sand Filters
DEP36-01	PLDE36	HRP20-01
DEP51-01	PLDE48	HRP24-01
DEP83-01	S7075	HRP30-01
	S80110	
DES25-01	S7MD60	HRS16-01
DES51-01	S7MD72	HRS20-01
DES60-01		HRS24-01
		S7S50
		S8S70

TABLE 2. Filter and Clamp to use with Valves

2" Valve P/N 263078,14826-0000, 14036-0000 Use with:		1-1/2" Valve P/N 14821-000 Use with:	
Filter	Kit	Filter	Kit
DEP36		DES25	
DEP51		DES36	
DEP83			24750-0331
DES51		HRS16	
DES60	24750-0341	HRS20	
HRP20		DEP36	
HRP24		DEP51	
HRP30		DES51	
		DES60	
			24750-0624
HRS24		DES60	
DES25		HRP20	
DES36		HRP24	
	24750-0341		
HRS16		HRS24	
HRS20		S8S70	

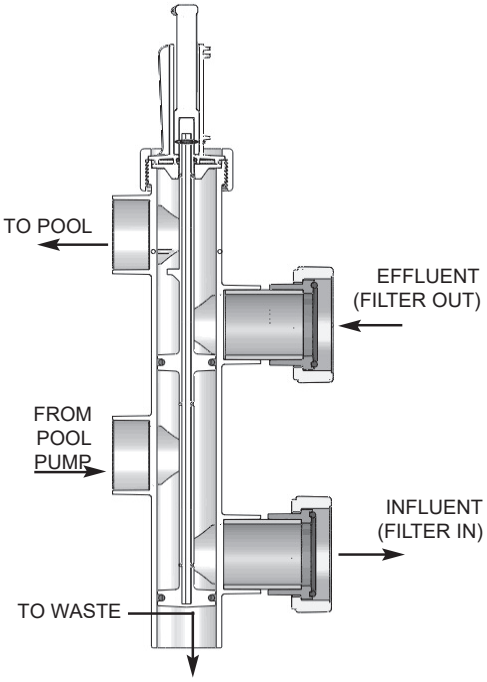

Figure 2 - FILTER Position. Flow pattern shown when valve handle in fully depressed position.

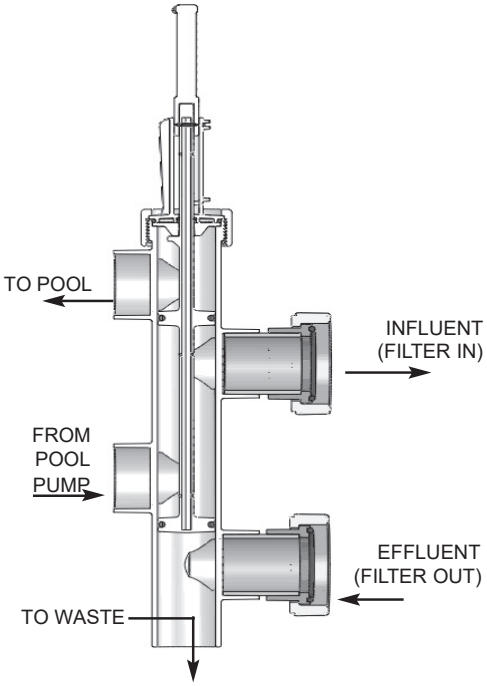

Figure 3 - BACKWASH Position. Flow pattern shown with valve handle in fully extended position.

OPERATION

These are two position valves. The valve handle must be either fully extended or full depressed. Connect center port to pump.

When valve stem is depressed (Figure 2): Water is directed to the bottom filter port. The top filter port flows to upper discharge. Lower discharge is idle.

When valve stem is extended (Figure 3): Water is directed to the top filter port. Bottom port opens to lower discharge.

MAINTENANCE

Inspect the valve twice yearly and ensure proper operation. If handle is difficult to adjust, follow the instructions below:

1. Disconnect power to the filter pump at the circuit breaker before continuing.
2. Pull the handle assembly upwards while rotating slightly and remove the assembly from the valve body.
3. Inspect O-rings for nicks, cuts, cracks or other damage. Replace O-rings if damaged.
4. Inspect valve seating areas for grooves, nicks or other damage.
5. Remove any corrosion using a wet No. 400 emery cloth. Sand lightly to prevent damaging the seating area.
6. Lubricate O-rings with a waterproof lubricant or petroleum jelly.
7. Insert handle assembly into valve body.
8. Lift the valve handle into the BACKWASH position. This will center the index plate with the handle shaft and valve bore.
9. Push the valve handle into the FILTER position. If the handle does not slide easily, then repeat the process above.

Winterizing:

Place the valve handle in a middle position, between the FILTER and BACKWASH positions in Figure 2 and Figure 3.

CONNECTING VALVE TO FILTER

To connect the valve to the filter ports, follow the instructions below:

DO NOT use pipe sealants on the union nut.

1. Ensure the unions and union O-rings are not damaged.
2. Install the union O-rings into the grooves in the union nuts.
3. Install union O-rings in groove in the unions.
4. Tighten the union nut hand tight.

WARNING! To avoid serious personal injury or property damage, follow cement manufacturer's instructions exactly.

FOR SLIP FITTINGS: Use a suitable cement adhesive compatible with ABS and PVC when fitting piping or adapters to slide valve. Please test before installing. The valve body is ABS plastic. Use primer on PVC components only. Allow a minimum of 4 hours to dry before pressure testing or operation. If ABS adapters are glued into valve ports instead of PVC fittings, use a suitable cement adhesive compatible with PVC.

FOR THREADED FITTINGS: Use a suitable cement adhesive compatible with ABS and PVC. Other substances may degrade plastic and create poor joints and leaks. DO NOT OVERTIGHTEN!

PLASTICE VALVE REPAIR PARTS LIST
Model 263053 and 263078

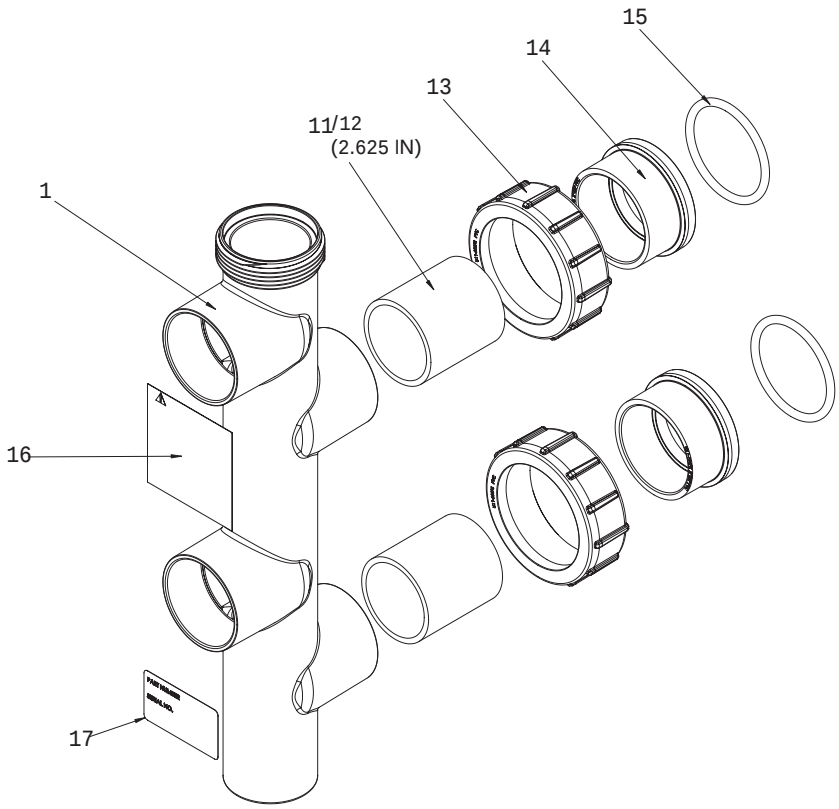

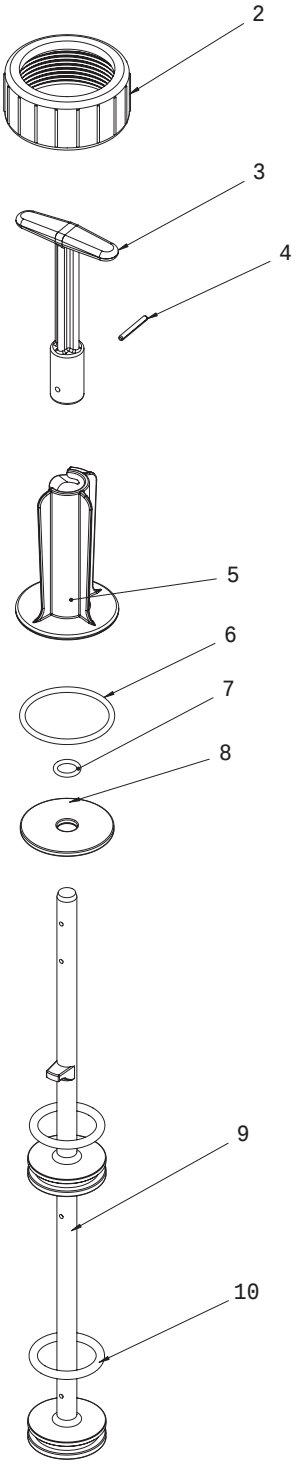

QTY. 263078	QTY. 263053	ITEM	PART No.	DESCRIPTION
1	1	1	270130	Body valve push pull 7.81 inch center
-	-	1	270171	Body Valve, Push Pull, 7.5 inch Center PVC, ALMOND
1	1	2	270141	Nut BLK SF PMP/VLV PSHPL
1	1	3	270134	Handle - Valve push pull
1	1	4	273063	Pin 1/8” locking
1	1	5	270131	Cap-valve push pull
1	1	6	273062	O-ring,-227,2.109x0.139, Buna N 70
1	1	7	6020006	O-ring,-112,0.487x1.103, Buna N 70
1	1	8	270132	Washer valve push pull
1	1	9	51012711	Piston shaft valve push pull
2	2	10	51005000	O-ring,-325,1.475x0.21, Buna N 70
2	-	11	270169	Adaptor, Hose Clamp
-	2	12	192393	Pipe PVC 10 3/8” SCH40
-	2	13	U11-200PS-B	Collar union 2”
-	2	14	U11-196PS-A	Adaptor union 2” SLIP
-	2	15	U9-362	O-ring #2-231 Buna N 70 Duro
-	1	16	270158	Label valve push pull
1	1	17	353007	Label, Serial
			263054	Kit, O-Rings, Items 4, 6, 7, 10 (includes two 10)
			263055	Kit, Piston Shaft ASY, Items, 3, 4, 5, 6, 7, 8, 9, 10

Performance Curves
Five Port Two Postition Valve

NOTE: Curves represent total loss of both halves of valve (double pass thru valve).

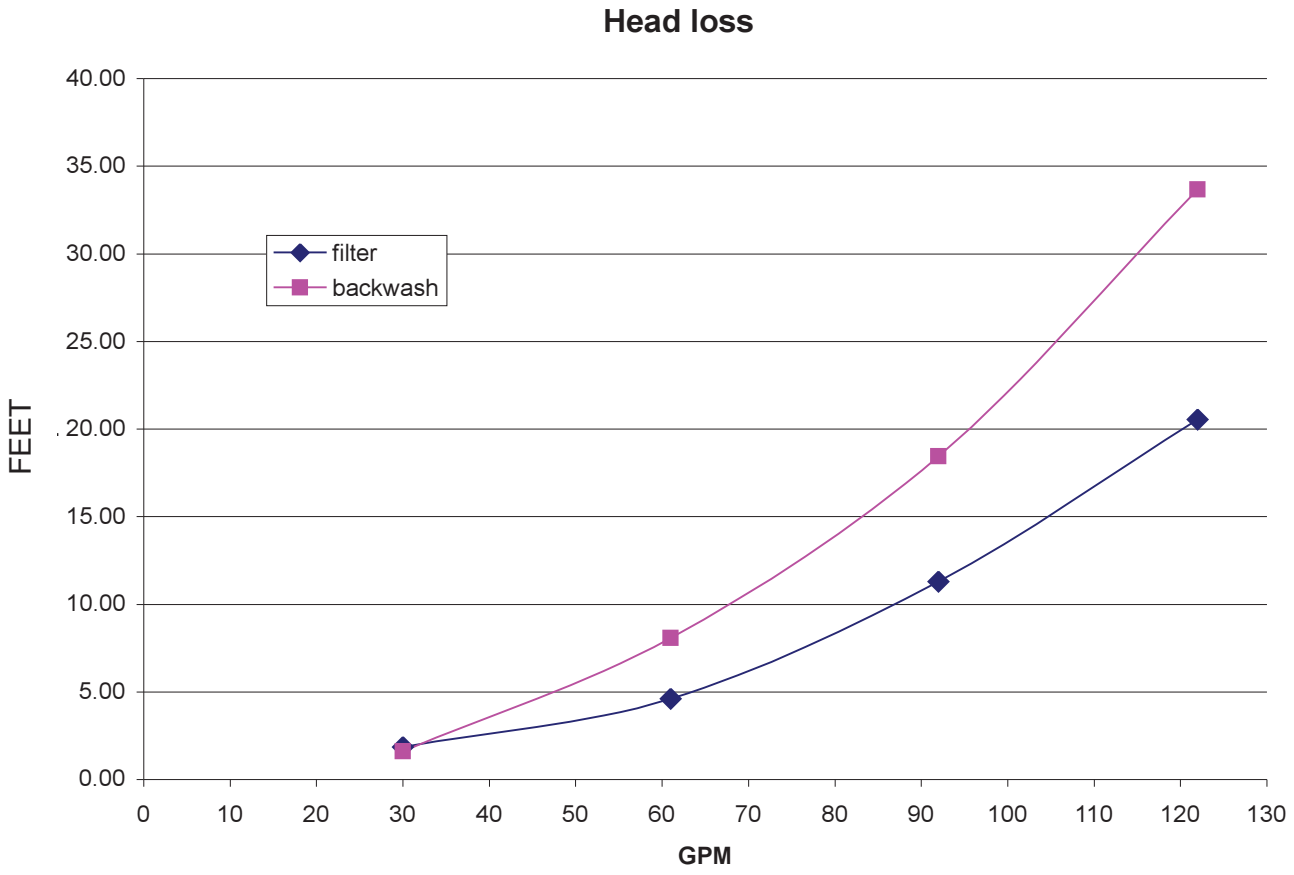

NOTES

STA-RITE®

P/N 270163 REV. D 4/23/24