PENTAIR

POWERMAX®
POOL HEATER

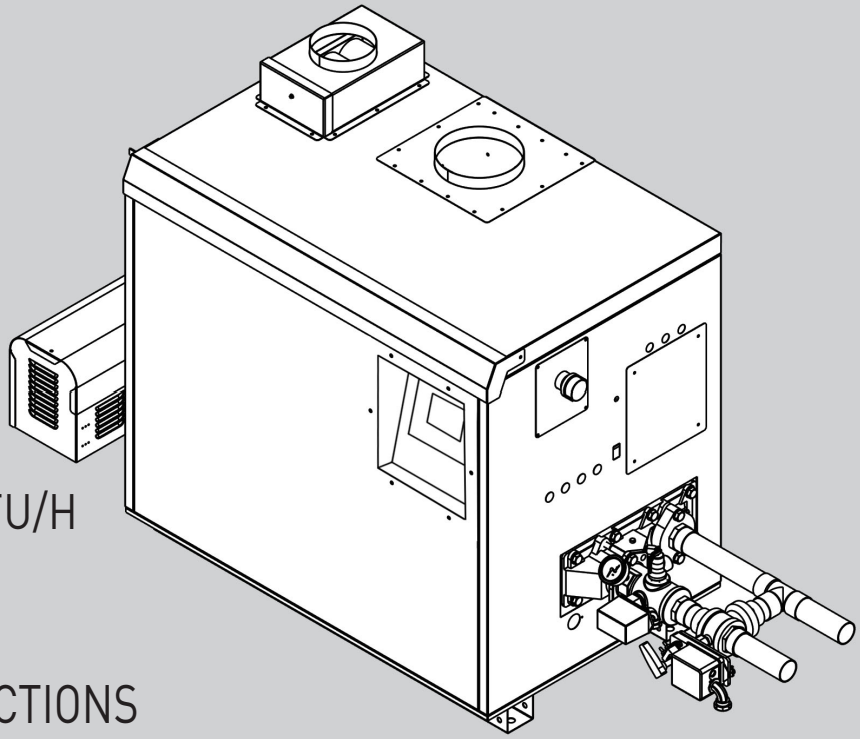

MODEL PMP
SIZES 500–2000 MBTU/H

INSTALLATION AND OPERATION INSTRUCTIONS

FOR YOUR SAFETY: This product must be installed and serviced by a professional service technician, qualified in hot water boiler installation and maintenance. Improper installation and/or operation could create carbon monoxide gas in flue gases which could cause serious injury, property damage, or death. Improper installation and/or operation will void the warranty. For indoor installations, as an additional measure of safety, Pentair strongly recommends installation of suitable Carbon Monoxide detectors in the vicinity of this appliance and in any adjacent occupied spaces.

⚠ WARNING

If the information in this manual is not followed exactly, a fire or explosion may result causing property damage, personal injury or loss of life.

Do not store or use gasoline or other flammable vapors and liquids in the vicinity of this or any other appliance.

WHAT TO DO IF YOU SMELL GAS

- **Do not try to light any appliance.**
- **Do not touch any electrical switch; do not use any phone in your building.**
- **Immediately call your gas supplier from a nearby phone. Follow the gas supplier's instructions.**
- **If you cannot reach your gas supplier, call the fire department.**

Installation and service must be performed by a qualified installer, service agency, or gas supplier.

⚠ AVERTISSEMENT

Assurez-vous de bien suivres les instructions données dans cette notice pour réduire au minimum le risque d'incendie ou d'explosion ou pour éviter tout dommage matériel, toute blessure ou la mort.

Ne pas entreposer ni utiliser d'essence ni d'autres vapeurs ou liquides inflammables dans le voisinage de cet appareil ou de tout autre appareil.

QUE FAIRE SI VOUS SENTEZ UNE ODEUR DE GAZ:

- **Ne pas tenter d'allumer d'appareils.**
- **Ne touchez à aucun interrupteur. Ne pas vous servir des téléphones dansle bâtiment où vous vous trouvez.**
- **Appelez immédiatement votre fournisseur de gaz depuis un voisin. Suivez les instructions du fournisseur.**
- **Si vous ne pouvez rejoindre le fournisseur de gaz, appelez le sservice des incendies.**

L'installation et l'entretien doivent être assurés par un installateur ou un service d'entretien qualifié ou par le fournisseur de gaz.

H2380300D

P/N 472642 Rev D 03/03/2023

IMPORTANT SAFETY INSTRUCTIONS
READ AND FOLLOW ALL INSTRUCTIONS
SAVE THESE INSTRUCTIONS

TABLE OF CONTENTS

SECTION 1 General Information 4

1.A Introduction 4
1.A Warranty 4
1.B Model Identification (Nomenclature) 5
1.C Dimensions 6
1.D Locating the Appliance 7
1.E Locating Heater with Respect to Pool System Loop 7
1.F Locating Appliance for Correct Horizontal Vent/Ducted Air Dist From Outside Wall 7
1.G Installation Kit 8

SECTION 2 Venting and Combustion Air 9

2.A Combustion Air 9
2.A.1 Combustion Air From Room 9
2.B Venting 10
2.B.1 Vent Categories 10
2.B.2 Category I Vent 10
2.B.3 Common Venting Systems 10
2.A.2 Intake Combustion Air 10
2.B.4 Category III Vent 11
2.C Locating Vent & Combustion Air Terminals 13
2.C.1 Side Wall Vent Terminal 13
2.C.2 Side Wall Combustion Air Terminal 14
2.C.3 Vertical Vent Terminal 14
2.C.4 Vertical Combustion Air Terminal 15
2.D Vent Terminals for Outdoor Units 15

SECTION 3 Gas Supply and Piping 16

SECTION 4 Water Connections 17

4.A Piping 17
4.B Automatic Chlorinators 17
4.C Sensor Locations 17

SECTION 5 Electrical Connections 19

5.A Installation Warnings 19
5.B Line Voltage Connections 19
5.B.1 Main Power 19
5.B.2 Pump Power 19
5.B.3 Pool Heater Pump 19
5.B.4 Auxiliary Power Output 20
5.C Low Voltage Connections 20
5.C.1 Field Wiring - Inputs 20
5.C.1.a Safety Interlocks 20
5.C.1.b Heat Demands 20
5.C.1.c Field Inputs (Open/Closed) 20
5.C.1.d Temperature Sensors 20
5.C.1.e Analog (BMS) Input 20
5.C.2 Field Wiring - Outputs 22
5.C.2.a Dry Contacts 22
5.C.2.b BMS RS485 (BACnet MS/TP or Modbus) 22
5.C.2.c 24VAC 22
5.D BMS Wiring Connections 23
5.E Wiring Diagram 24
5.F Ladder Diagram 26

SECTION 6 Touchscreen and System Ops 28

6.A The Home Screen 28
6.A.1 Home Screen Status Window 28
6.A.2 Home Screen Active Icons 29
6.B Lock / Unlock Display Screen 30
6.C Keypad Operations 31
6.D Quick Start 32
6.D.1 CH 32
6.D.1.a CH1 32
6.D.2 Anti-Short Cycle 32
6.D.3 Time & Date 33
6.E Configure Screen 34
6.E.1 CH 34
6.E.1.a CH1 34
6.E.2 Pumps 35
6.E.3 Temp Limits 36
6.E.4 External 36
6.E.4.a External – Remote Set Point 37
6.E.4.b External Firing Rate 37
6.E.5 Setting the Time and Date 38
6.E.6 Miscellaneous Features 38
6.E.6.a Mixing Valve. Low Temp Pool Heater 38
6.E.6.b Anti-Short Cycle 39
6.E.6.c COM Port 39
6.E.6.d Temperature Conversion 40

Configure Screen (continued)

6.E.6.e Frost Protection 40
6.E.7 Login 40
6.F Service Screens 41
6.F.1 Burner 41
6.F.2 Digital I/O (Input / Output) 41
6.F.3 Analog I/O 42
6.F.4 Screen Settings 42
6.F.5 History 42
6.F.6 Restart 43
6.F.7 Factory Reset 43
6.G Messages and USB 43
6.G.1 Messages 43
6.G.2 USB Functionality 44
6.H Active Demands 45
6.I The Navigation Bar 45
6.J Date and Time Display Area 45

SECTION 7 Sequence of Operation 46
7.A Sequence of Operation 46
7.B Shutting Down the Pool Heater 47
7.C Restarting the Pool Heater 47
7.C Therapeutic Pools (Spas) 47

SECTION 8 Burner Set Up 48
8.A Set Up for 0 to 2500 Feet Altitude 48
8.B Set Up for High Altitude(>2500 Feet) 48

SECTION 9 Maintenance 50
9.A System Maintenance 50
9.B Appliance Maintenance and Comp Desc 50
9.B.1 Burners 50
9.B.2 Filter 50
9.B.3 Gas Valves 50
9.B.4 Manual Reset High Limit Control 50
9.B.5 Automatic Reset High Limit Control 51
9.B.6 Controller 51
9.B.7 Ignitors 51
9.B.8 Ignition Sensors 51
9.B.9 Transformer 51
9.B.10 Blowers 51
9.B.11 Flow Switch 52
9.B.12 Heat Exchanger Coil 52

SECTION 10 Trouble Shooting 53
10.A Resolving Lockouts 53
10.B Delayed Ignition — Possible Causes 53
10.C Short Cycling — Water Heater 53
10.D High Gas Consumption 53
10.E Troubleshooting Errors and Lockouts 54
10.F Parameter Tables 56
10.F.1 Pool Heater 56
10.F.2 Modbus Memory Map 58
10.F.3 BACnet MSTP Memory Map 60

SECTION 11 Replacement Parts 62
11.A General Information 62
11.B Parts List 62
11.C Parts Illustrations 68

SECTION 1 General Information

In the Commonwealth of Massachusetts, this appliance must be installed by a licensed plumber or gas fitter.

⚠ WARNING

This pool heater **must** be installed in accordance with the procedures detailed in this manual, or the manufacturer's warranty may be voided. The installation must conform to the requirements of the local jurisdiction having authority, and, in the United States, to the latest edition of the National Fuel Gas Code, ANSI Z223.1/NFPA54. In Canada, the installation must conform to the latest edition of CAN/CGA-B149.1, Natural Gas Installation Code or CAN/CGA-B149.2, Propane Gas Installation Code, and/or local codes. Where required by the authority having jurisdiction, the installation of this appliance must conform to the Standard for Controls and Safety Devices for Automatically Fired Boilers, ANSI/ASME CSD-1. Any modifications to this appliance, its gas controls, or wiring may void the warranty. If field conditions require modifications, consult the factory representative before initiating such modifications.

⚠ AVERTISSEMENT

Ce chauffe-piscine doit être installé conformément aux procédures décrites dans ce manuel, ou la garantie du fabricant peut être annulée. L'installation doit être conforme aux exigences de la juridiction locale ayant autorité, et, aux États-Unis, pour l'édition la plus récente du National Fuel Gas Code (Code pour le gaz combustible naturel) ANSI Z223.1/NFPA54. Au Canada, l'installation doit respecter les exigences de la plus récente édition du Code d'installation du gaz naturel et du propane CSA B149.1, et/ou des codes locaux de construction en vigueur. Lorsque la réglementation locale l'exige, l'installation des appareils électroménagers chauffe-piscine doit respecter les exigences du Standard for Controls and Safety Devices for Automatically Fired Boilers (Code pour les équipements de commande et de sécurité des chaudières à combustion automatique), ANSI/ASME CSD-1. Toute modification apportée à la chaudière, aux régulateurs de gaz ou au câblage, peut compromettre la garantie. Si certaines conditions particulières rendent des adaptations nécessaires, consulter un représentant du fabricant avant d'entreprendre ces modifications.

1.A Introduction

This manual provides information necessary for the installation, operation, and maintenance of Pentair PowerMax copper tube pool heaters. Read it carefully before installation.

All application and installation procedures should be reviewed completely before proceeding with the installation. Consult the factory, or local factory representative, with any issues or questions regarding this equipment. Experience has shown that most operating issues are caused by improper installation.

The Pool Heater appliance is protected against over pressurization. A pressure relief valve is fitted to all appliances. It is installed on the outlet header, at the water outlet of the appliance.

IMPORTANT: The inlet gas pressure to the appliance must not exceed 13" W.C. (3.2kPa).

All installations must be made in accordance with the 1). American National Standard Z223.1/NFPA54-Latest Edition "National Fuel Gas Code" or 2). CAN/CGA 1-B149 "Installation Codes for Gas Burning Appliances and Equipment" and with the requirement of the local utility or other authorities having jurisdiction. Such applicable requirements take precedence over the general instructions contained herein.

All electrical wiring is to be done in accordance with the local codes, or in the absence of local codes, with: 1). The National Electrical Code ANSI/NFPA No. 70-latest Edition, or 2). CSA STD. C22.1 "Canadian Electrical Code - Part 1". This appliance must be electrically grounded in accordance with these codes.



WARNING:
Cancer and Reproductive Harm
www.P65Warnings.ca.gov.
As required by the State of California Proposition 65.

1.B Warranty

Pentair Aquatic Systems appliances are covered by a limited warranty. Owners should submit online warranty registration at ***www.Pentair.com***.

All warranty claims must be made to an authorized Pentair Aquatic Systems representative, directly to Customer Service, or online at ***www.Pentair.com***.

Claims must include the serial number and model (this information can be found on the rating plate), installation date, and name of the installer. Shipping costs are not included in the warranty coverage.

Some accessory items are shipped in separate packages. Verify receipt of all packages listed on the packing slip. Inspect everything for damage immediately upon delivery, and advise the carrier of any shortages or damage. Any such claims should be filed with the carrier. The carrier, not the shipper, is responsible for shortages and damage to the shipment whether visible or concealed.

1.C Model Identification (Nomenclature)

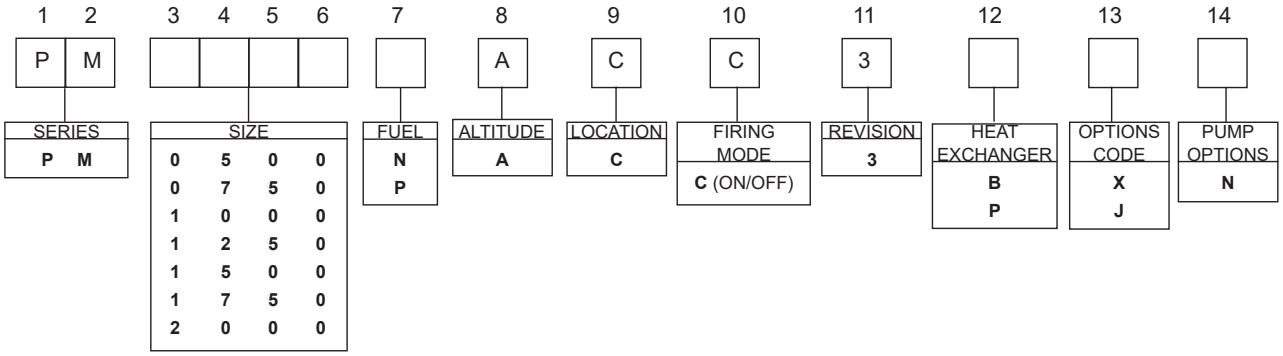

Consult the rating plate on the unit. The following information describes the model number structure.

Model Character Designation

1-2 Model Series Designation
P M = Pentair PowerMax

3-6 Size
0 5 0 0 = 500,000 BTU/h input
0 7 5 0 = 750,000 BTU/h input
1 0 0 0 = 999,000 BTU/h input
1 2 5 0 = 1,250,000 BTU/h input
1 5 0 0 = 1,500,000 BTU/h input
1 7 5 0 = 1,750,000 BTU/h input
2 0 0 0 = 1,999,000 BTU/h input

7 Fuel
N = Natural Gas
P = Liquid Propane

8 Altitude
A = 0-10,000 feet

9 Location
C = Indoor and Outdoor *

10 Firing Mode
C = On-off

11 Revision
3 = Third version

12 Heat Exchanger
B = Glass-lined CI / copper / brz trim
P = Glass-lined cast iron / cu-nickel / brz trim

13 Option Code
X = Standard unit
J = CSD-1, FM, IRI, IL

14 Pump Options
N = Pump mounted, normal water pump

*Outdoor installation of this unit is not permitted in Canada.

1.D Dimensions

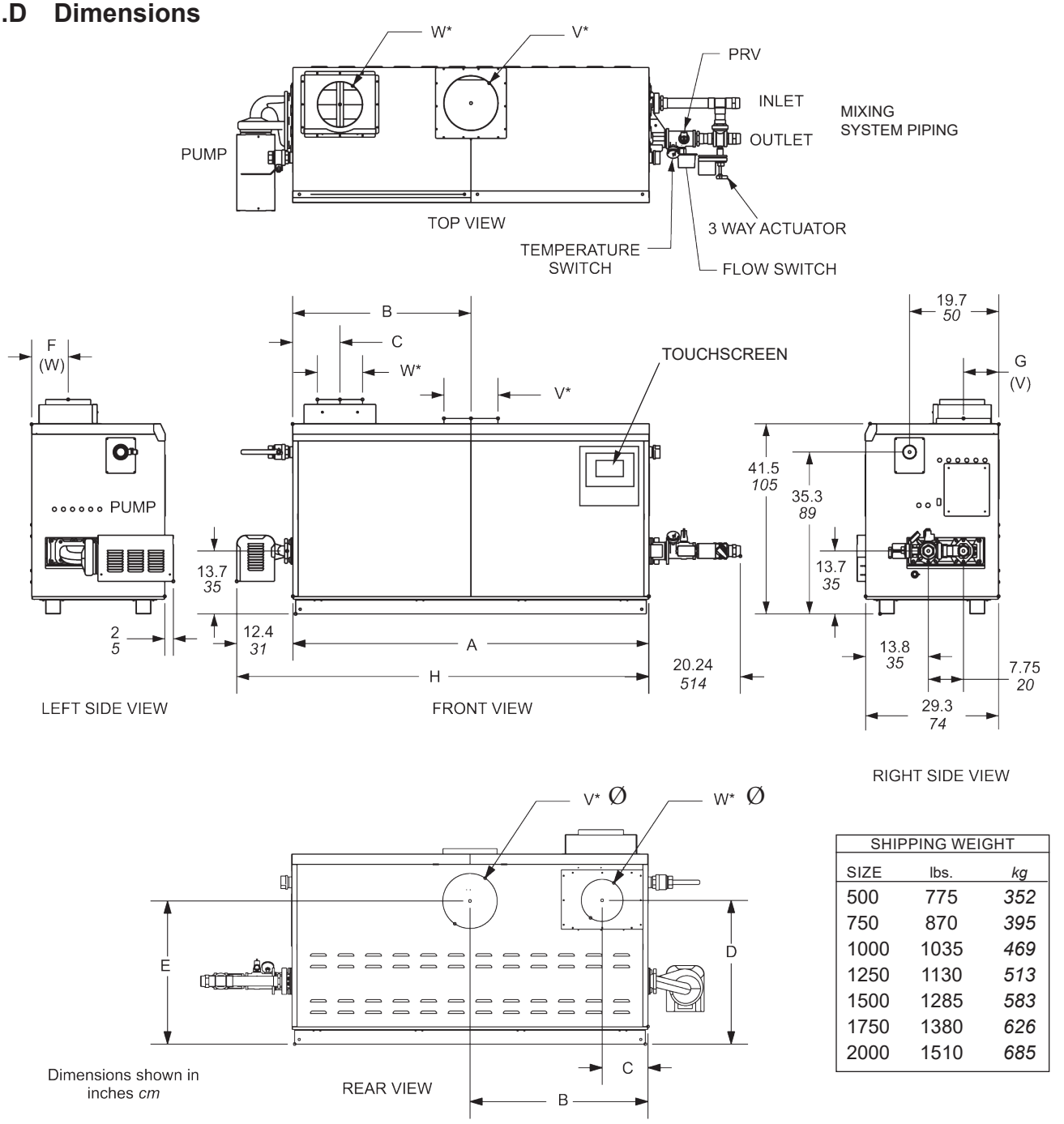

SHIPPING WEIGHT		
SIZE	lbs.	*kg*
500	775	*352*
750	870	*395*
1000	1035	*469*
1250	1130	*513*
1500	1285	*583*
1750	1380	*626*
2000	1510	*685*

Size	A		B		C		D		E		F		G		H		Air Conn. W*		Vent Conn. V*		Horiz. Vent Pipe	
500	**33½**	*85*	**15¾**	*40*	**5¾**	*15*	**29¾**	*76*	**33¾**	*86*	**7¾**	*20*	**8¾**	*22*	**46**	*117*	**6**	*15*	**8**	*20*	**6**	*15*
750	**45½**	*116*	**21¾**	*55*	**5¾**	*15*	**29¾**	*76*	**33¾**	*86*	**7¾**	*20*	**8¾**	*22*	**58**	*147*	**8**	*20*	**10**	*25*	**8**	*20*
1000	**57½**	*146*	**28¾**	*73*	**5¾**	*15*	**29¾**	*76*	**33¾**	*86*	**7¾**	*20*	**7**	*18*	**70**	*178*	**8**	*20*	**10**	*25*	**8**	*20*
1250	**68**	*172*	**34**	*86*	**10⅛**	*26*	**30¾**	*78*	**31⅛**	*79*	**8¾**	*22*	**8¾**	*22*	**80**	*203*	**12**	*30*	**12**	*30*	**10**	*25*
1500	**78½**	*199*	**39¾**	*101*	**10⅛**	*26*	**30¾**	*78*	**31⅛**	*79*	**8¾**	*22*	**8¾**	*22*	**91**	*231*	**12**	*30*	**12**	*30*	**10**	*25*
1750	**89**	*226*	**44½**	*113*	**10⅛**	*26*	**30¾**	*78*	**31⅛**	*79*	**8¾**	*22*	**8¾**	*22*	**101**	*256*	**12**	*30*	**14**	*36*	**12**	*30*
2000	**99½**	*253*	**49¾**	*126*	**10⅛**	*26*	**30¾**	*78*	**31⅛**	*79*	**8¾**	*22*	**8¾**	*22*	**112**	*284*	**12**	*30*	**14**	*36*	**12**	*30*

*Air and vent connections may be on top or back of the unit, and are field convertible. Dimensions in **inches** *cm*

Figure 1. Dimensional Data.

SIZE	VENT COLLAR SIZE		HORIZONTAL VENT PIPE DIAMETER		INTAKE AIR PIPE DIAMETER		MAX. PIPE LENGTH		MAX. NO. OF ELBOWS	SIDE WALL VENT TERMINAL PART NUMBER	SIDE WALL COMBUSTION AIR TERMINAL PART NUMBER
	in.	*cm*	**in.**	*cm*	**in.**	*cm*	**ft.**	*m*			
500	**8**	*20*	**6**	*15*	**6**	*15*	**50**	*15*	3	CA001401	CA20260701
750	**10**	*25*	**8**	*20*	**8**	*20*	**50**	*15*	3	CA001402	CA20260703
1000	**10**	*25*	**8**	*20*	**8**	*20*	**50**	*15*	3	CA001402	CA20260703
1250	**12**	*30*	**10**	*25*	**12**	*30*	**50**	*15*	3	CA001405	CA20260706
1500	**12**	*30*	**10**	*25*	**12**	*30*	**50**	*15*	3	CA001405	CA20260706
1750	**14**	*36*	**12**	*30*	**12**	*30*	**50**	*15*	3	CA001404	CA20260706
2000	**14**	*36*	**12**	*30*	**12**	*30*	**50**	*15*	3	CA001404	CA20260706

Table 1. Horizontal Vent / Combustion Air Parameters.

1.E Locating the Appliance

The appliance should be located to provide clearances on all sides for maintenance and inspection. It should not be located in an area where leakage of any connections will result in damage to the area adjacent to the appliance or to lower floors of the structure.

When such a location is not available, it is recommended that a suitable drain pan, adequately drained, be installed under the appliance.

The appliance is design certified by CSA-International for installation on combustible flooring; in basements; in closets, utility rooms or alcoves**.** Pool Heaters must never be installed on carpeting. The location for the appliance should be chosen with regard to the vent pipe lengths and external plumbing. The unit shall be installed such that the gas ignition system components are protected from water (dripping, spraying, rain, etc.) during operation and service (circulator replacement, control replacement, etc.). When vented vertically, this pool heater must be located as close as practical to a chimney or outside wall. If the vent terminal and/or combustion air terminal terminate through a wall, and there is potential for snow accumulation in the local area, both terminals should be installed at an appropriate level above grade.

The dimensions and requirements that are shown in Table 2 should be met when choosing the locations for the appliance.

APPLIANCE SURFACE	REQUIRED CLEARANCE FROM COMBUSTIBLE MATERIAL		RECOMMENDED SERVICE ACCESS CLEARANCE	
	inches	*cm*	**inches**	*cm*
Left Side	**1**	*2.5*	**24**	*61*
Right Side	**1**	*2.5*	**24**	*61*
Top	**1**	*2.5*	**12**	30
Back	**1**	*2.5*	**12****	*30***
Front	**1**	*2.5*	**36**	*91*
Vertical (Category 1) Vent	**6***	*15.2**		
Horizontal (Category 3) Vent	per UL1738 venting system supplier's instructions			

*1" (2.5cm) when b-vent is used.
**When vent and/or combustion air connects to the back, recommended clearance is 36" (91cm).

Table 2. Clearances.

1.F Locating Heater with Respect to Pool System Loop

For the best results, the pool heater should be located within 15 feet (4.6m) of the pool system loop. The pump is sized for 30 feet (9.1m) of piping.

If the appliance must be installed with longer piping runs, then larger diameter piping shall be used. Consult the factory for assistance.

1.G Locating Appliance for Correct Horizontal Vent/Ducted Air Distance From Outside Wall

The forced draft combustion air blower/blowers in the appliance has/have sufficient power to pull air and vent properly when the following guidelines for horizontal air and vent are followed (see Table 1 on page 7).

NOTE: On all model sizes, the vent collar size is larger than the size of the vent pipe that can be used. Vent collar size and horizontal pipe diameters can be found in Table 1. The larger vent collar size is to accommodate Category I (vertical) vent systems.

NOTE: When located on the same wall, the combustion air intake terminal must be installed a minimum of 12" (30cm) below the exhaust vent terminal and separated by a minimum of 36 inches (91cm) horizontally.

The air intake terminal must be installed high enough to avoid blockage from snow, leaves and other debris.

1.H Installation Kit

All units are shipped with an Installation Kit which contains the following items.

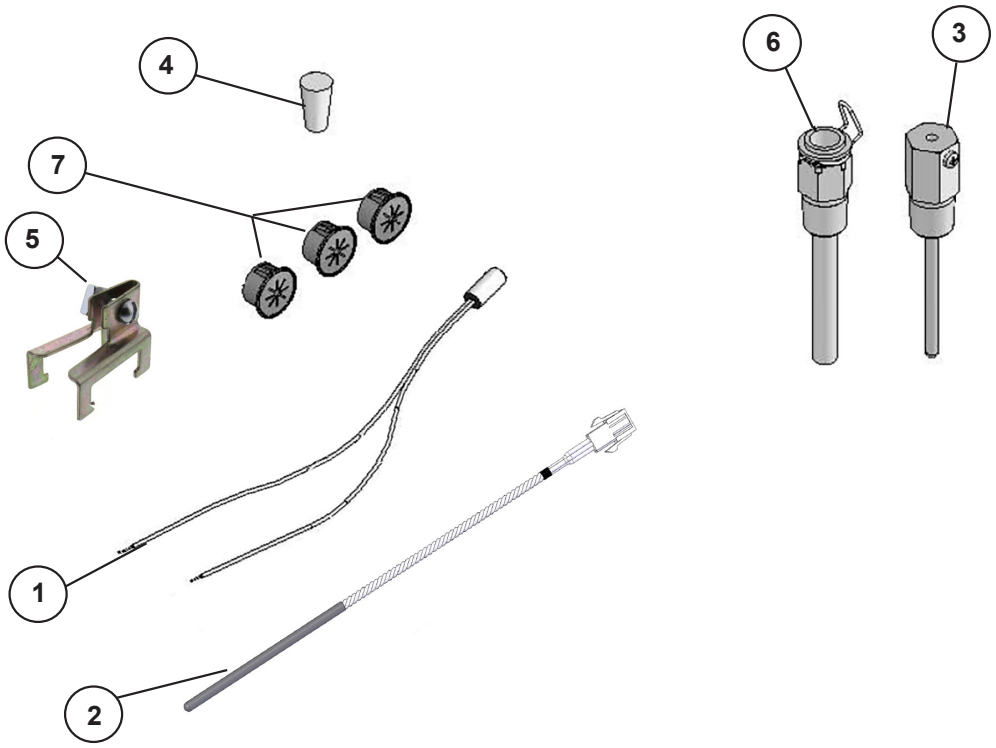

Qty	Part Number	Description	Item
1	E2401300	WIRE HARNESS, 15' EXTENSION (not shown)	**8**
3	S0064900	BUSHING, NYLON, 7/8, SLIT	**7**
1	E2058300	WELL, IMMERSION, 1/2" NPT	**6**
1	E0083700	CLAMP, CAPILLARY	**5**
1	P2039100	STOPPER, RUBBER, TAPERED	**4**
1	E2366700	WELL, IMMERSION, FOR Ø3/16 BULB	**3**
1	E2366900	SENSOR, OUTLET, THERMISTER, DUAL, 10K NTC & 20K NTC	**2**
1	E2103300	SENSOR, INLET, TEMPERATURE, WATER	**1**

Figure 2. Installation Kit Components

SECTION 2 Venting and Combustion Air

2.A Combustion Air

This pool heater must have provisions for combustion and ventilation air in accordance with section 5.3, Air for Combustion and Ventilation, of the National Fuel Gas Code, ANSI Z223.1, or Sections 7.2, 7.3 or 7.4 of CAN/CGA B149, Installation Codes, or applicable provisions of the local building codes.

This pool heater may receive combustion air from the space in which it is installed, or it can be ducted directly to the unit from the outside. Ventilation air must be provided in either case. Never obtain combustion air from the pool area. Corrosion of and/or damage to the pool heater may result.

NOTE: The installer must verify that at least one carbon monoxide alarm has been installed within a residential living space or home following the alarm manufacturer's instructions and applicable local codes before putting the appliance into operation.

REMARQUER : L'installateur est tenu de vérifier qu'au moins une alarme de détection de monoxyde de carbone soit installée dans un espace résidentiel ou dans un domicile conformément aux directives du fabricant de l'alarme et aux codes locaux applicables avant de mettre l'appareil en service.

⚠ CAUTION

CO needs to be less than 150 ppm.

⚠ ATTENTION

Le CO doit être inférieur à 150 ppm

2.A.1 Combustion Air From Room

In the United States, the most common requirements specify that the space shall communicate with the outdoors in accordance with method 1 or 2, which follow. Where ducts are used, they shall be of the same cross-sectional area as the free area of the openings to which they connect.

Method 1: Two permanent openings, one commencing within 12 inches (30 cm) of the top and one commencing within 12 inches (30 cm) of the bottom, of the enclosure shall be provided. The openings shall communicate directly, or by ducts, with the outdoors or spaces that freely communicate with the outdoors. When directly communicating with the outdoors, or when communicating to the outdoors through vertical ducts, each opening shall have a minimum free area of 1 square inch per 4000 Btu/hr (5.5 square cm/kW) of total input rating of all equipment in the enclosure. When communicating to the outdoors through horizontal ducts, each opening shall have a minimum free area of not less than 1 square inch per 2000 Btu/hr (11 square cm/kW) of total input rating of all equipment in the enclosure. Table 3 shows data for this sizing method, for each pool heater model.

Method 2: One permanent opening, commencing within 12 inches (30 cm) of the top of the enclosure, shall be permitted. The opening shall directly communicate with the outdoors or shall communicate through a vertical or horizontal duct to the outdoors or spaces that directly communicate with the outdoors and shall have a minimum free area of 1 square inch per 3000 Btu/hr (7 square cm/kW) of the total input rating of all equipment located in the enclosure. This opening must not be less than the sum of the areas of all vent connectors in the confined space.

Other methods of introducing combustion and ventilation air are acceptable, providing they conform to the requirements in the applicable codes listed above.

In Canada, consult local building and safety codes or, in absence of such requirements, follow CSA B149.1.

	EACH OPENING*	
SIZE	**SQUARE INCHES**	*SQUARE CM*
500	**125**	*807*
750	**188**	*1213*
1000	**250**	*1613*
1250	**313**	*2020*
1500	**375**	*2420*
1750	**438**	*2826*
2000	**500**	*3226*

*Net Free Area in Square Inches / Square cm
Area indicated is for one of two openings; one at floor level and one at the ceiling, so the total net free area could be double the figures indicated.

This chart is for use when communicating directly with the outdoors. For special conditions and alternate methods, refer to the latest edition of ANSI Z223.1.

Note: Check with louver manufacturers for net free area of louvers. Correct for screen resistance to the net free area if a screen is installed. Check all local codes applicable to combustion air.

Table 3. Combustion Air Openings.

2.A.2 Intake Combustion Air

The combustion air can be taken through the wall, or through the roof. When taken from the wall, it must be taken from out-of-doors by means of the horizontal wall terminal (see Table 1). When taken from the roof, a field-supplied rain cap or an elbow arrangement must be used to prevent entry of rain water (see Figure 3).

Use single-wall galvanized pipe, per Table 4, for the combustion air intake (see Table 1) for appropriate size. Route the intake to the heater as directly as possible. Seal all joints with tape. Provide adequate hangers. The unit must not support the weight of the combustion air intake pipe. Maximum linear pipelength allowed is 50 feet (15.2m). Three elbows have been calculated into the 50-foot (15.2m) linear run. Subtract 10 allowable linear feet (3.0m) for every additional elbow used (see Table 1). When fewer than 3 elbows are used, the maximum linear pipe length allowed is still 50 feet (15.2m).

The connection for the intake air pipe is on the filter box. This pool heater may have venting and combustion air ducting attached to the top or the back. They are shipped with the connections at the top. For attaching either or both pipes to the back, the mounting flanges are reversible by removing the mounting screws and orienting the flanges in the desired position. Replace the screws after positioning flanges. Run a bead of silicone around the collar and slide the pipe over the collar. Secure with sheet metal screws.

In addition to air needed for combustion, air shall also be supplied for ventilation, including all air required for comfort and proper working conditions for personnel. This pool heater loses less than 1 percent of its input rating to the room, but other heat sources may be present.

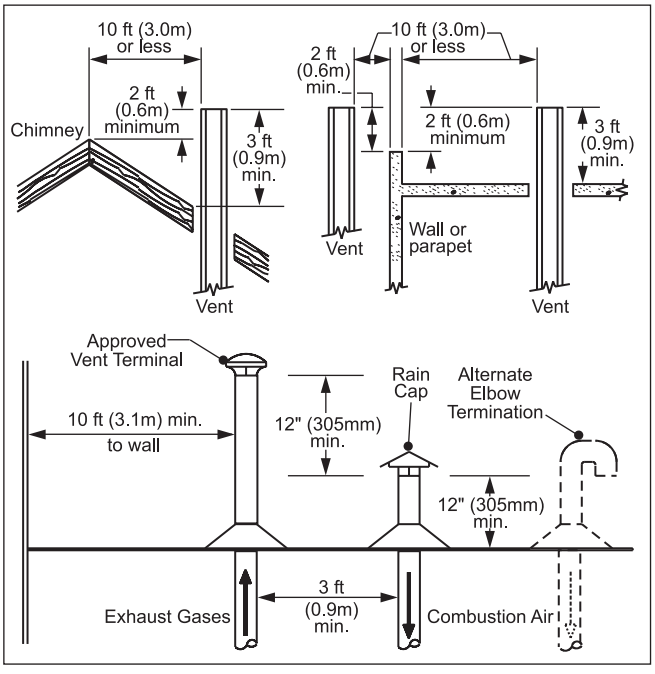

Figure 3. Combustion Air and Vent Through Roof.

TERM	DESCRIPTION
Pipe	Single-wall galvanized steel pipe, 24 gauge minimum (either insulated or non-insulated)
Joint Sealing	Permanent duct tape or aluminum tape

Table 4. Required Combustion Air Piping Material.

2.B Venting

2.B.1 Vent Categories

Depending upon desired venting, it may be considered a Category I or a Category III appliance. In general, a vertical vent system will be a Category I system. However, in rare instances, a pool heater's vertical vent system may be considered Category III. In the U.S., the National Fuel Gas Code (ANSI Z223.1-Latest Edition), or in Canada the CSA B149.1 (latest edition), defines a Category I vent system, and includes rules and tables to size these vent systems. If the pool heater's vertical vent system does not satisfy the criteria for Category I venting, it must be vented as a Category III system.

All vent systems for this pool heater which discharge horizontally (without the use of a power venter) are considered Category III vent systems.

2.B.2 Category I Vent

When vented as a category I appliance, the vent system must conform to the National Fuel Gas Code (ANSI Z223.1-Latest Edition) in the U.S., or in Canada, to CSA B149.1 (latest edition). The vent system must be sized and installed for a Category I Fan-Assisted Appliance.

If chimney height is greater than 25 feet, or if multiple units are vented into the same vertical vent, a barometric damper must be installed on each appliance, such that the flue draft does not exceed (negative) 0.1" w.c.

If using a power venter for any type of Category I venting, the draft should be set between (negative) 0.01 and 0.10" w.c.

2.B.3 Common Venting Systems

These pool heaters are Category I fan-assisted when vented vertically and adhering to all applicable codes. These units are not allowed to be vented into a common horizontal Cat III vent system (horizontal discharge or other configuration for Cat III), unless a properly sized vent fan is used, and the common vent system is properly designed by the vent fan manufacturer or a qualified engineer. When common venting these fan-assisted pool heaters with other appliances through one shared vertical duct called a "common vent", special care must be taken by the installer to ensure safe operation. In the event that the common vent is blocked, it is possible, especially

for fan-assisted devices, to vent backwards through non-operating appliances sharing the vent, allowing combustion products to infiltrate occupied spaces. **If the appliances are allowed to operate in this condition, serious injury or death may occur.**

⚠ WARNING

Operation of appliances with a blocked common vent may lead to serious injury or death. Safety devices must be implemented to prevent blocked common vent operation. If safe operation of all appliances connected to a common vent cannot be assured, including prevention of spillage of flue gasses into living spaces, common venting should not be applied, and appliances should each be vented separately.

⚠ AVERTISSEMENT

Le fonctionnement d'appareils connectés à un évent commun bouché peut provoquer de sérieuses blessures corporelles ou la mort. Des dispositifs de sécurité doivent être mis en place pour empêcher que les appareils soient utilisés avec un évent commun bouché. Si un fonctionnement sécuritaire de tous les appareils reliés à un évent commun et si la prévention des dégagements accidentels de gaz de combustion dans des zones habitées ne peuvent pas être assurés, un évent commun ne doit pas être mis en place et les appareils doivent être munis d'évents individuels séparés.

It is for this reason that, in addition to following proper vent sizing, construction and safety requirements from the National Fuel Gas Code, ANSI Z223.1 or in Canada, from CSA B149.1 as well as all applicable local codes, it is required that installers provide some means to prevent operation with a blocked common vent. It is suggested that a blocked vent safety system be employed such that if the switch from one appliance trips due to excessive stack spill or backpressure indicating a blocked vent condition, that all appliances attached to the vent be locked out and prevented from operating. Note that this pool heater is equipped with a blocked vent safety (pressure) switch, as shipped. However, this safety switch has only been designed and tested to be effective in installations where the pool heater is vented separately and NOT common vented with other appliances. As an additional precaution, it is recommended that a Carbon Monoxide (CO) alarm be installed in all enclosed spaces containing combustion appliances. If assistance is required in determining how a blocked vent safety system should be connected to a this product, please call the phone number listed on back cover of this manual.

Refer to the installation and operating instructions on all appliances to be common vented for instructions, warnings, restrictions and safety requirements. If safe operation of all appliances connected to a common vent cannot be assured, including prevention of spillage of flue gasses into living spaces, common venting should not be applied, and appliances should each be vented separately.

2.B.4 Category III Vent

When this pool heater is vented with horizontal discharge, it must be installed per this installation manual and the venting system manufacturer's installation instructions. The vent system must be sealed stainless steel, per Table 5.

Route the vent pipe to the heater as directly as possible. Seal all joints and provide adequate hangers as required in the venting system manufacturer's Installation Instructions. Horizontal portions of the venting system must be supported to prevent sagging and may not have any low sections that could trap condensate.

The unit must not support the weight of the vent pipe. Horizontal runs must slope downwards not less than ¼ inch per foot (2 cm/m) from the unit to the vent terminal.

L'appareil ne doit pas supporter le poids de la gaine d'évent. Les parties horizontales doivent être installées avec une pente de 2 cm/m (1/4 inch par pied) descendant de l'appareil vers la sortie de l'évent.

Reference Table 1 for the size of the Category III vent system. Up to three elbows can be used with 50 linear feet (15.2m) of pipe. Subtract 10 allowable linear feet (3.0m) for every additional elbow used.

⚠ WARNING

The outdoor vent terminal gets hot. Unit must be installed in such a way as to reduce the risk of burns from contact with the vent terminal.

TERM	DESCRIPTION
Pipe	Must comply with UL Standard 1738 such as Type 29-4C Stainless Steel (either insulated or non-insulated).
Joint Sealing	Follow vent manufacturer's instructions

Table 5. Required Horizontal Venting Material.

2.C Locations for Vent Pipe Terminator

		Canadian Installations[1]	U.S. Installations[2]
A =	Clearance above grade, veranda, porch, deck, or balcony	12 in (30 cm)	12 in (30 cm)
B =	Clearance to window or door that may be opened	• 6 in (15 cm) for appliances ≤ 10,000 Btuh (3 kW) • 12 in (30 cm) for appliances > 10,000 Btuh (3 kW) and ≤ 100,000 Btuh (30 kW) • 36 in (91 cm) for appliances >100,000 Btuh (30 kW)	• 6 in (15 cm) for appliances ≤ 10,000 Btuh (3 kW) • 9 in (23 cm) for appliances > 10,000 Btuh (3 kW) and ≤ 50,000 Btuh (15 kW) • 12 in (30 cm) for appliances >50,000 Btuh (15 kW)
C =	Clearance to permanently closed window	See Note 4	See Note 5
D =	Vertical clearance to ventilated soffit located above the terminal within a horizontal distance of 2 ft (61 cm) from the center line of the terminal	See Note 4	See Note 5
E =	Clearance to unventilated soffit	See Note 4	See Note 5
F =	Clearance to outside corner	See Note 4	See Note 5
G =	Clearance to inside corner	See Note 4	See Note 5
H =	Clearance to each side of centerline extended above meter / regulator assy	3 ft (91 cm) within a height of 15 ft (4.6 m)	See Note 5
I =	Clearance to service regulator vent outlet	3 ft (91 cm)	See Note 5
J =	Clearance to nonmechanical air supply inlet to building or the combustion air inlet to any other appliance	• 6 in (15 cm) for appliances ≤ 10,000 Btuh (3 kW) • 12 in (30cm) for appliances > 10,000 Btuh (3 kW) and ≤ 100,000 Btuh (30 kW) • 36 in (91 cm) for appliances > 100,000 Btuh (30 kW)	• 6 in (15 cm) for appliances ≤ 10,000 Btuh (3 kW) • 9 in (23cm) for appliances > 10,000 Btuh (3 kW) and ≤ 50,000 Btuh (15 kW) • 12 in (30 cm) for appliances > 50,000 Btuh (15 kW)
K =	Clearance to a mechanical air supply inlet	6 ft (1.83 m)	3 ft (91 cm) above if within 10 ft (3 m) horizontally
L =	Clearance above paved sidewalk or paved driveway located on public property	7 ft (2.13 m)†	7 ft (2.13 m) for mechanical draft systems (Category I appliances). Vents for Category II and IV appliances cannot be located above public walkways or other areas where condensate or vapor can cause a nuisance or hazard*
M =	Clearance under veranda, porch, deck, or balcony	12 in (30 cm)‡	See Note 5

† A vent shall not terminate directly above a sidewalk or paved driveway that is located between two single family dwellings and serves both dwellings.
‡ Permitted only if veranda, porch, deck, or balcony is fully open on a minimum of two sides beneath the floor.

Notes:
1) In accordance with the current CSA B149.1, Natural Gas and Propane Installation Code.
2) In accordance with the current ANSI Z223.1/NFPA 54, Natural Fuel Gas Code.
3) If locally adopted installation codes specify clearances different than those illustrated, then the most stringent clearance shall prevail.
4) For clearances not specified in CAN/CSA-B149, clearance is in accordance with local installation codes and the requirements of the gas supplier.
5) For clearances not specified in ANSI Z223.1/ NFPA 54, clearance is in accordance with local installation codes and the requirements of the gas supplier.
6) IMPORTANT: Terminal must be placed such that it remains a minimum of 12” above maximum expected snow line. Local codes may have more specific requirements, and must be consulted.

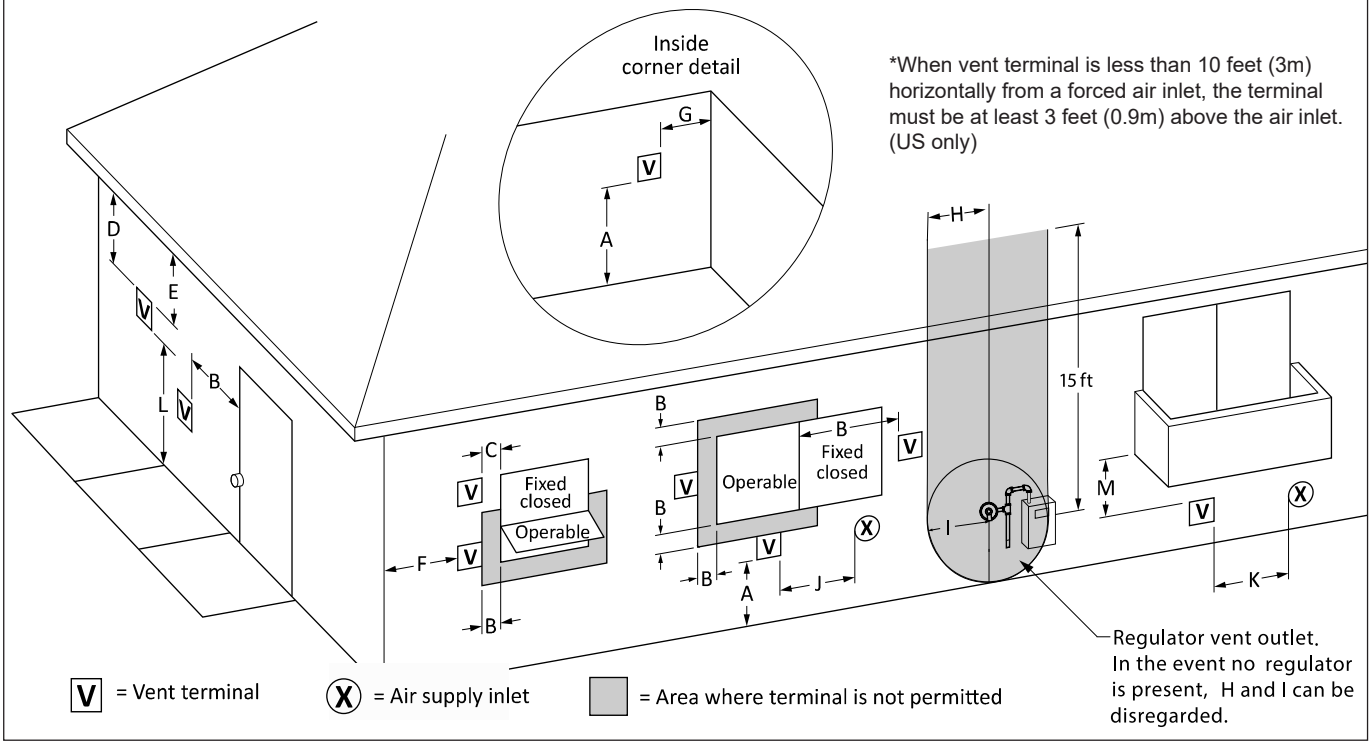

Figure 4. Combustion Air and Vent Through Side Wall.

2.D Locating Vent & Combustion Air Terminals

2.D.1 Side Wall Vent Terminal

The appropriate side wall vent hood must be used, and is listed in the installation and operation manual. The terminal provides a means of installing the vent piping through the building wall, and must be located in accordance with ANSI Z223.1/NFPA 54 and applicable local codes. In Canada, the installation must be in accordance with CSA B149.1 or .2 and local applicable codes. Consider the following when installing the terminal:

1. Figure 4 shows the requirements for mechanical vent terminal clearances for the U.S. and Canada.
2. Vent terminals for condensing appliances or appliances with condensing vents are **not** permitted to terminate above a public walkway, or over an area where condensate or vapor could create a nuisance or hazard.
3. Locate the vent terminal so that vent gases cannot be drawn into air conditioning system inlets.
4. Locate the vent terminal so that vent gases cannot enter the building through doors, windows, gravity inlets or other openings. Whenever possible, locations under windows or near doors should be avoided.
5. Locate the vent terminal so that it cannot be blocked by snow. The installer may determine that a vent terminal must be higher than the minimum shown in codes, depending upon local conditions.
6. Locate the terminal so the vent exhaust does not settle on building surfaces or other nearby objects. Vent products may damage such surfaces or objects.
7. If the boiler or water heater uses ducted combustion air from an intake terminal located on the same wall, locate the vent terminal at least 3 feet (0.9m) horizontally from the combustion air terminal, and locate the vent terminal at least 1 foot (0.3m) above the combustion air terminal.

⚠ WARNING

The outdoor vent terminal gets hot. Unit must be installed in such a way as to reduce the risk of burns from contact with the vent terminal.

⚠ AVERTISSEMENT

La sortie d'évent à l'extérieur devient très chaude. Elle doit être installée de façon à réduire le risque de brûlures au contact de l'extrémité de l'évent.

Important Note: Massachusetts Code Requirement.

From Massachusetts Rules and Regulations 248 CMR 5.08:

(a) For all side wall horizontally vented gas fueled equipment installed in every dwelling, building or structure used in whole or in part for residential purposes, including those owned or operated by the Commonwealth and where the side wall exhaust vent termination is less than seven (7) feet above finished grade in the area of the venting, including but not limited to decks and porches, the following requirements shall be satisfied:

1. INSTALLATION OF CARBON MONOXIDE DETECTORS.
   At the time of installation of the side wall horizontal vented gas fueled equipment, the installing plumber or gasfitter shall observe that a hard-wired carbon monoxide detector with an alarm and battery back-up is installed on the floor level where the gas equipment is to be installed. In addition, the installing plumber or gasfitter shall observe that a battery operated or hard-wired carbon monoxide detector with an alarm is installed on each additional level of the dwelling, building or structure served by the side wall horizontal vented gas fueled equipment.
   It shall be the responsibility of the property owner to secure the services of qualified licensed professionals for the installation of hard-wired carbon monoxide detectors.
   a. In the event that the side wall horizontally vented gas fueled equipment is installed in a crawl space or an attic, the hard-wired carbon monoxide detector with alarm and battery back-up may be installed on the next adjacent floor level.
   b. In the event that the requirements of this subdivision cannot be met at the time of completion of installation, the owner shall have a period of thirty (30) days to comply with the above requirements; provided, however, that during said thirty (30) day period, a battery operated carbon monoxide detector with an alarm shall be installed.

2. APPROVED CARBON MONOXIDE DETECTORS.
   Each carbon monoxide detector as required in accordance with the above provisions shall comply with NFPA 720 and be ANSI/UL 2034 listed and IAS certified.

3. SIGNAGE.
A metal or plastic identification plate shall be permanently mounted to the exterior of the building at a minimum height of eight (8) feet above grade directly in line with the exhaust vent terminal for the horizontally vented gas fueled heating appliance or equipment. The sign shall read, in print size no less than one-half (½) inch in size, "GAS VENT DIRECTLY BELOW. KEEP CLEAR OF ALL OBSTRUCTIONS".

4. INSPECTION.
The state or local gas inspector of the side wall horizontally vented gas fueled equipment shall not approve the installation unless, upon inspection, the inspector observes carbon monoxide detectors and signage installed in accordance with the provisions of 248 CMR 5.08(2)(a) 1 through 4.

(b) EXEMPTIONS: The following equipment is exempt from 248 CMR 5.08(2)(a) 1 through 4:

1. The equipment listed in Chapter 10 entitled "Equipment Not Required To Be Vented" in the most current edition of NFPA 54 as adopted by the Board; and

2. Product Approved side wall horizontal vented gas fueled equipment installed in a room or structure separate from the dwelling, building or structure used in whole or in part for residential purposes.

(c) MANUFACTURER REQUIREMENTS – GAS EQUIPMENT VENTING SYSTEM PROVIDED. When the manufacturer of Product Approved side wall horizontally vented gas equipment provides a venting system design or venting system components with the equipment, the instructions provided by the manufacturer for installation of the equipment and the venting system shall include:

1. Detailed instructions for the installation of the venting system design or the venting system components; and

2. A complete parts list for the venting system design or venting system.

(d) MANUFACTURER REQUIREMENTS – GAS EQUIPMENT VENTING SYSTEM NOT PROVIDED. When the manufacturer of a Product Approved side wall horizontally vented gas fueled equipment does not provide the parts for venting the fuel gases, but identifies "special venting systems", the following requirements shall be satisfied by the manufacturer:

1. The referenced "special venting system" instructions shall be included with the appliance or equipment installation instructions; and

2. The "special venting systems" shall be Product Approved by the Board, and the instructions for that system shall include a parts list and detailed installation instructions.

(e) A copy of all installation instructions for all Product Approved side wall horizontally vented gas fueled equipment, all venting instructions, all parts lists for venting instructions, and/or all venting design instructions shall remain with the appliance or equipment at the completion of the installation.

2.D.2 Side Wall Combustion Air Terminal

Never obtain combustion air from the pool area. Corrosion of and/or damage to the pool heater may result. The side wall combustion air terminal (listed in Table 1 on page 7) must be used when the unit takes its combustion air through a duct from a side wall. Consider the following when installing the terminal:

1. Do not locate the air inlet terminal near a source of corrosive chemical fumes (e.g., cleaning fluid, chlorinated compounds, etc.)
2. Locate the terminal so that it will not be subject to damage by accident or vandalism.
3. Locate the combustion air terminal so that it cannot be blocked by snow. The National Fuel Gas Code requires that it be at least 12 inches (30 cm) above grade, but the installer may determine it should be higher, depending upon local conditions.
4. If this pool heater is side-wall vented to the same wall, locate the vent terminal at least 3 feet (0.9m) horizontally from the combustion air terminal, and locate the vent terminal at least 1 foot (0.3m) above the combustion air terminal. (see Figure 4).

2.D.3 Vertical Vent Terminal

When the unit is vented through the roof, the vent must extend at least 3 feet (0.9m) above the point at which it penetrates the roof. It must extend at least 2 feet (0.6m) higher than any portion of a building within a horizontal distance of 10 feet (3.0m), and high enough above the roof line to prevent blockage from snow. When the combustion air is taken from the roof, the combustion air must terminate at least 12" (30cm) below the vent terminal (see Figure 3).

2.D.4 Vertical Combustion Air Terminal

When combustion air is taken from the roof, a field-supplied rain cap or an elbow arrangement must be used to prevent entry of rain water (see Figure 3). The opening on the end of the terminal must be at least 12" (30cm) above the point at which it penetrates the roof, and high enough above the roof line to prevent blockage from snow. When the vent terminates on the roof, the combustion air must terminate at least 12" (30cm) below the vent terminal.

2.E Vent Terminals for Outdoor Units

For outdoor applications, the vent and combustion air openings must be covered with proper terminals to prevent rain, snow and other objects from falling into the Pool Heater.

If local codes allow, outdoor installations may use 1' of appropriately sized galvanized single wall or B-Vent and a rain cap for exhaust vent termination in the default configuration (venting out of the top). An appropriately sized galvanized 90° ell, positioned with the opening facing down, may be used on the combustion air inlet in the default configuration on the back of the unit. Note that some local codes may require a higher vertical vent height, extending above any perimeter fencing, etc. In installations where the appearance of the vent is objectionable, the low profile vent terminals in Table 6 may be used.

Part numbers for the low profile terminals to cover the vent and combustion air openings are shown in Table 6.

SIZE	OUTDOOR VENT TERMINAL	OUTDOOR COMBUSTION AIR TERMINAL
500	20254703	D2007900
750	20254705	D2008000
1000	20254705	D2008000
1250	D2007700	D2008200
1500	D2007700	D2008200
1750	D2007800	D2008200
2000	D2007800	D2008200

Table 6. Vent Terminals for Outdoor Units.

⚠ WARNING

Do not use open flame to check for leaks. An open flame could lead to explosion, which could result in property damage, serious injury or death.

⚠ AVERTISSEMENT

Ne recherchez pas les fuites avec une flamme nue. Une flamme nue peut provoquer une explosion qui peut causer des dommages matériels, de sérieuses blessures corporelles ou la mort.

SIZE AND GAS TYPE	DISTANCE FROM GAS METER OR LAST STAGE REGULATOR 0-100'	*0-31m*	100-200'	*31-61m*	200-300'	*61-91m*
500 natural	1-1/2"	*3.8cm*	2"	*5.1cm*	2"	*5.1cm*
500 propane	1"	*2.5cm*	1-1/2"	*3.8cm*	1-1/2"	*3.8cm*
750 natural	2"	*5.1cm*	2"	*5.1cm*	2-1/2"	*6.4cm*
750 propane	1-1/2"	*3.8cm*	1-1/2"	*3.8cm*	2"	*5.1cm*
1000 natural	2"	*5.1cm*	2-1/2"	*6.4cm*	3"	*7.6cm*
1000 propane	1-1/2"	*3.8cm*	2"	*5.1cm*	2-1/2"	*6.4cm*
1250 natural	2-1/2"	*6.4cm*	2-1/2"	*6.4cm*	3"	*7.6cm*
1250 propane	2"	*5.1cm*	2"	*5.1cm*	2-1/2"	*6.4cm*
1500 natural	2-1/2"	*6.4cm*	3"	*7.6cm*	3"	*7.6cm*
1500 propane	2"	*5.1cm*	2-1/2"	*6.4cm*	2-1/2"	*6.4cm*
1750 natural	2-1/2"	*6.4cm*	3"	*7.6cm*	3"	*7.6cm*
1750 propane	2"	*5.1cm*	2-1/2"	*6.4cm*	2-1/2"	*6.4cm*
2000 natural	3"	*7.6cm*	3"	*7.6cm*	3-1/2"	*8.9cm*
2000 propane	2-1/2"	*6.4cm*	2-1/2"	*6.4cm*	3"	*7.6cm*

Notes:
1. These figures are based on 1/2" (0.12kPa) water column pressure drop.
2. Check supply pressure and local code requirements before proceeding with work.
3. Pipe fittings must be considered when determining gas pipe sizing.

Table 7. Gas Piping Size.

SECTION 3 Gas Supply and Piping

3.A Gas Supply and Piping

Gas piping should be supported by suitable hangers or floor stands, not by the appliance.

The pool heaters gas train allows the user to pipe the gas from either the right side or the left side of the unit. As shipped, the right side of the gas train is capped off, and there is a manual valve on the left side. If desired, the manual valve on the left side of the gas train may be moved to the right side, and the cap on the right side may be moved to the left.

Review the following instructions before proceeding with the installation.

1. Verify that the appliance is fitted for the proper type of gas by checking the rating plate. These pool heaters are equipped to operate at elevations up to 10,000 feet (3050m). These appliances may be adjusted to operate properly at altitudes above 2500 feet (see SECTION 8 on page 48) and the input will be reduced if the heating value of the gas supply is below sea level values.
2. Verify the inlet gas supply pressure.

	Min	Max
Natural Gas	4” W.C.	10.5” W.C.
Propane	8” W.C.	13” W.C.

3. Refer to Table 7 on page 16, size supply.
4. Run gas supply line in accordance with all applicable codes.
5. Locate and install manual shutoff valves in accordance with state and local requirements.
6. A sediment trap must be provided upstream of the gas controls.
7. All threaded joints should be coated with piping compound resistant to action of liquefied petroleum gas.
8. The appliance and its individual shutoff valve must be disconnected from the gas supply piping during any pressure testing of that system at test pressures in excess of 1/2 PSIG (3.45kpa).
9. The unit must be isolated from the gas supply system by closing its individual manual shutoff valve during any pressure testing of the gas supply piping system at test pressures equal to or less than 1/2 PSIG (3.45kpa).
10. The appliance and its gas connection must be leak tested before placing it in operation.
11. Purge all air from gas lines.

NOTE: The Pool Heater appliance and all other gas appliances sharing the gas supply line must be firing at maximum capacity to properly measure the inlet supply pressure. The pressure can be measured at the supply pressure port on the gas valve. Low gas pressure could be an indication of an undersized gas meter, undersized gas supply lines and/or an obstructed gas supply line.

SECTION 4 Water Connections

4.A Piping

Hot water piping should be supported by suitable hangers or floor stands. Do not support piping with this appliance. Due to expansion and contraction of copper pipe, consideration should be given to the type of hangers used. Rigid hangers may transmit noise through the system resulting from the piping sliding in the hangers. It is recommended that padding be used when rigid hangers are installed. Maintain 1" clearance to combustibles for hot water pipes.

Pipe the discharge of the relief valve (full size) to a drain or in a manner to prevent injury in the event of pressure relief. Install shutoff valves where required by code.

Pool Heaters are equipped with mounted pumps, which serve the heater plus 30 feet of full-sized piping with a normal number of fittings. If the pool's loop is more than 15 feet away from the heater, please contact the factory.

A mixing system is mounted on the heater. The system consists of a three-way valve, temperature control and piping. The temperature sensor for the control is in the heater inlet. When the control detects water temperature that is below 120°F (49°C), it will direct the three-way valve to actuate, which sends water

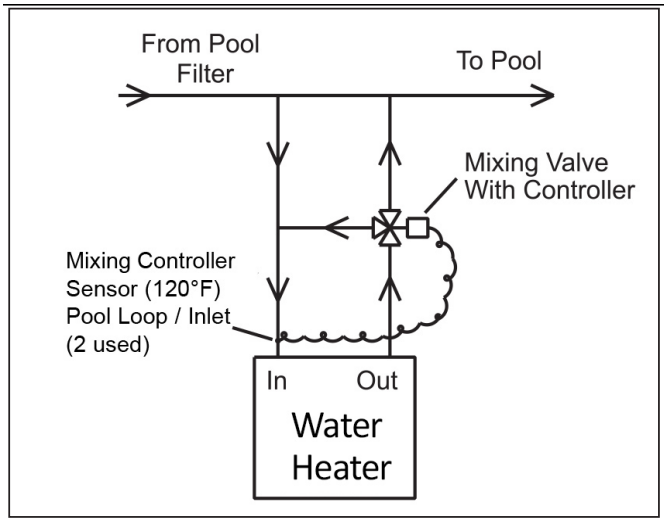

Figure 5. Mixing System.

from the outlet of the heater back to the inlet. The outlet water that is diverted to the inlet mixes with the return water from the pool, and keeps the inlet temperature at or above 120°F (49°C) (see Figure 5). This keeps cold return water from causing condensing on the outside of the Pool Heater heat exchanger.

IMPORTANT NOTE: Since heater outlet temperatures can reach 150°F (66°C) in some cases, copper or CPVC are recommended materials for heater connection piping. PVC material may be used for the inlet valve and the piping upstream of it.

When pipe, fittings, grids or any other element of the filter system are made of plastic materials, they may be damaged by the momentary "back siphoning" of hot water from the heater when the filter pump stops running.

See Figure 6 for proper connection of the Pool Heater heater to the pool loop.

4.B Automatic Chlorinators

A concentration of chlorine in the pool heater can be very destructive; therefore the following rules about the installation and operation of such devices must be followed:

1. The chlorinator should be installed so it introduces the gas or solution downstream of the heater.
2. The chlorinator should be wired so it cannot operate unless the filter pump is operating.
3. The chlorinator should be provided with an anti-siphon device so that the draining of the piping after the pump shuts off will not siphon chlorine solution into the heater.
4. When the operation of a chlorinator is such that it must be installed in the pump suction, or some other place where the chlorine solution flows through the heater, corrosion of the heater can occur. Excessive concentrations of chlorine resulting from improper adjustment or chlorinator equipment failure are responsible for this corrosion. The heater warranty does not cover the resulting damage to the heat exchanger.

4.C Sensor Locations

This pool heater is shipped with a field-installed mixing system and must be piped in primary-secondary style.

A **System Return Thermistor** and a **System Supply Thermistor** are included with the pool heater installation kit and must be installed into the pool loop as shown in Figure 6 on page 18.

Install the provided **System Return Thermistor Immersion Well** into the pool system loop within 12" (30 cm) of the inlet to the heater. Install the system return thermistor into the immersion well. Run the wires back to the heater terminal block located on the right side of the boiler. See Figure 10 on page 21. Connect wires at TB1-16 and TB1-17 (either wire) of the System Return terminals of the heater.

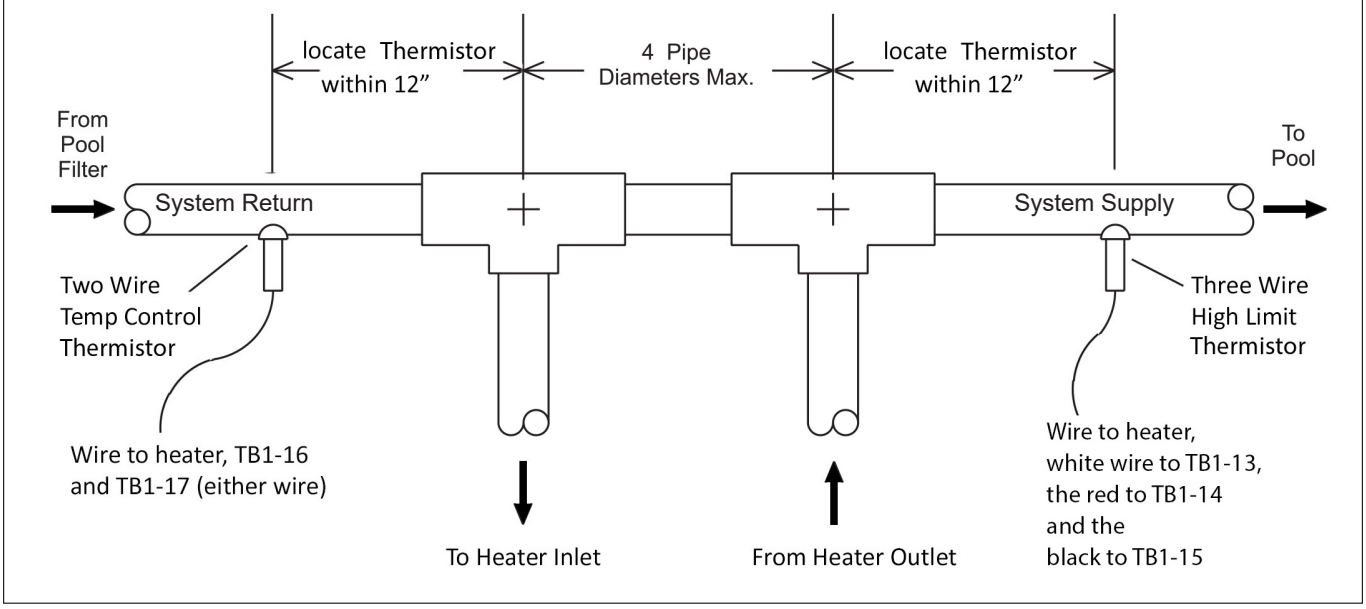

Figure 6. Pool Heater Piping.

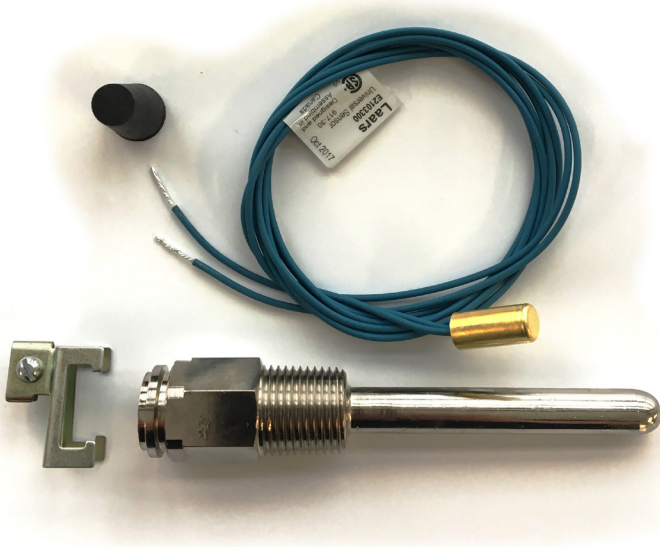

Figure 7. System Return Thermistor

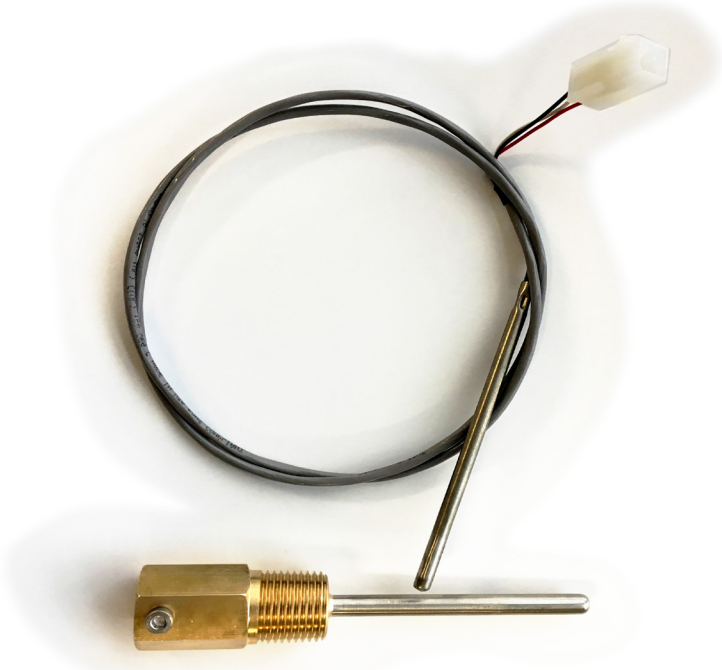

Figure 8. System Supply Thermistor

Inlet Thermistor/Sensor	E2103300
Inlet Immersion Well	E2058300
Outlet Thermistor/Sensor	E2366900
Outlet Immersion Well	E2366700
System Supply Thermistor	E2366900
System Return Thermistor	E2103300

Table 8. Sensor Part Numbers

The System SUPPLY Thermistor must be installed in the pool loop within 12” (30 cm) downstream of the heater outlet. See Figure 6.

Install the provided immersion well. Then install the System Supply Thermistor into the immersion well. Run the wires back to the heater terminal block located on the right side of the boiler. See Figure 10 on page 21. Using the provided insertion tool, install the wires as follows: the white wire to TB1-13, the red to TB1-14 and the black to TB1-15

Early units may have a harness plug which will need to be cutoff and wires stripped back a ¼”.

SECTION 5 Electrical Connections

5.A Installation Warnings

⚠ WARNING

This appliance must be electrically grounded in accordance with the requirements of the authority having jurisdiction or, in the absence of such requirements, with the latest edition of the National Electrical Code, ANSI/NFPA 70, in the U.S. and with the latest edition of CSA C22.1 Canadian Electrical Code, Part 1, in Canada. Do not rely on the gas or water piping to ground the metal parts of the boiler. Plastic pipe or dielectric unions may isolate the boiler electrically. Service and maintenance personnel, who work on or around the boiler may be standing on wet floors could be electrocuted by an ungrounded boiler. Electrocution can result in severe injury or death.

Single pole switches, including those of safety controls and protective devices, must not be wired in a grounded line.

All electrical connections are made at the power terminals, which are located at the rear of the appliance, or at the input/output terminal strips which are located on the right side of the appliance.

All internal electrical components have been pre-wired. No attempt should be made to connect electrical wires to any other location except the terminal blocks.

5.B Line Voltage Connections

Incoming power must be protected by the appropriate circuit breaker (fuse) and installed by a qualified electrician or authorized/qualified personnel. Recommended over current protection ratings are shown in Table 9.

5.B.1 Main Power

All non-pump mounted models require a single 120-volt supply. Pump mounted sizes 500-1500 also use a single 120-volt supply, and sizes 1750-2000 require two separate 120-volt supplies.

Pool heater sizes 500-1500 main power (L1, N1, and Ground) shall be connected to the three wires supplied. This main power circuit is identified by three solid colored wires (10 AWG) – black (L1), white (N1), and green (Ground).

Pool heater sizes 1750-2000 main power (L1, N1, and Ground) is identified by three solid colored wires (10 AWG) – black (L1), white (N1), and green (Ground). The pump circuit is identified by three 12 AWG wires, as outlined in the next Section.

5.B.2 Pump Power

The pump circuit is identified by three 12 AWG wires: black with a white stripe (L2), white (N2), and green (Ground).

If desired, an installer can change the pump mounted single service units to use a separate circuit for the pump. Instructions to make this change are found in the next Section.

Over Current Recommendations (Amps)			
	PowerMax		Pump Only
Size	Without Pump	With Pump	Pump
500	15	20	15
750	15	20	15
1000	20	25	15
1250	25	30	15
1500	25	30	15
1750	25	–	15
2000	25	–	20

Table 9. Circuit Protection

5.B.3 Pool Heater Pump

Conversion to a separate pump circuit requires bringing in a separate circuit for the pump and removing the three jumper wires within the internal wiring of the 120-volt portion of the pool heater(see Figure 9). This action should only be performed by qualified personnel, with the power disconnected from the unit.

To rewire the pump circuit, bring in a separate 120-volt circuit (L2, N2, and Ground). Remove the jumper wires shown in Figure 9. Connect the incoming line voltage (L2) to the main power switch using a ¼" female insulated push on terminal. From the other side of the main power switch, connect to the main power terminal block, in the rear of the unit, using a ¼" female insulated push on terminal. This will be in the same position where the line voltage jumper terminated. Connect N2 and Ground to the main terminal block, in the rear of the unit, using ¼" female insulated push terminals. These connections will also be the same positions where the neutral and ground jumpers were terminated.

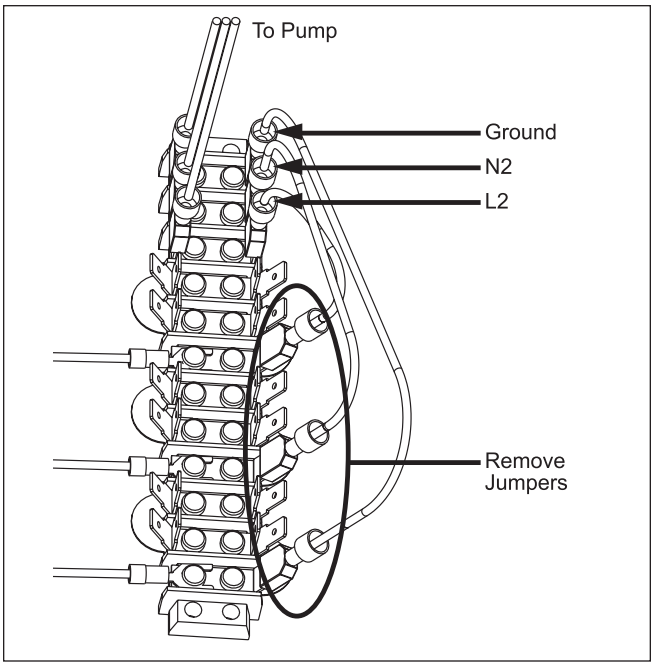

Figure 9. Removing Jumpers.

5.B.4 Auxiliary Power Output

The Auxiliary Power Output, if used, is controlled by Field Input 2. When Field Input 2 is closed, line voltage is supplied at terminal 7 and neutral on terminal 8 of the output terminal strip. This output is rated for 250VAC, 2.5A maximum.

5.C Low Voltage Connections

Route all wires through the knockouts on the right side of the pool heater Connect low voltage wiring to the input and output terminals shown in Figure 10. Connect all wiring as shown on the wiring diagram.

5.C.1 Field Wiring - Inputs

5.C.1.a Safety Interlocks

Field Interlock: If the Field Interlock is utilized, remove the jumper from the terminals 1 and 2 of the input terminal strip and wire the interlock to these terminals. Only dry contacts can be connected to the Field Interlock terminals.

NOTE: Safety chain voltage is 24VDC.

5.C.1.b Heat Demands

CH1: Connect the thermostat/aquastat or end switch (isolated contact only) wires to terminals 3 and 4 of the input terminal strip.

NOTE: The heat demand contacts must be dry contacts. This pool heaters controller heat demand voltage is 24VDC.

5.C.1.c Field Inputs (Open/Closed)

Field Input 1: Field Input 1, if used, is connected across terminals 9 and 10 of the input terminal strip. When connected, Field Input 1 controls the Auxiliary Dry Contact. If Field Input 1 is open, the Auxiliary Dry Contact is open. If Field Input 1 is closed, the Auxiliary Dry Contact is closed. Only dry contacts can be connected to Field Input 1.

Field Input 2: Field Input 2, if used, is connected across terminals 11 and 12 of the input terminal strip. When connected, Field Input 2 controls the Auxiliary Power Output. If Field Input 2 is open, the Auxiliary Power Output is off. If Field Input 2 is closed, the controller turns power on at the Auxiliary Power Output.

NOTE: The controller applies 24VDC to the Field Inputs to detect the status of the contacts.

5.C.1.d Temperature Sensors

System Supply: The system supply sensor, supplied in the installation kit, is connected to terminals 13, 14 and 15 of the input terminal strip. See Figure 5 on page 17. When connected, the controller automatically detects the presence of this sensor. The system supply temperature is shown on the home screen above the red system input arrow. See Screen 26 on page 41 This sensor is supplied loose with the pool heater and is installed in the piping or tank per the suggested piping diagrams.

System Return: The system return sensor, supplied in the installation kit, is connected to terminals 16 and 17 of the input terminal strip. The controller automatically detects the presence of this sensor. The heater controls to this temperature sensor. This temperature is shown on the home screen above the blue system output arrow. This sensor is supplied loose with the pool heater and is installed in the piping or tank per the suggested piping diagrams.

5.C.1.e Analog (BMS) Input

Building Management System (BMS): The BMS input, if used, is connected to terminals 22 and 23 of the input terminal strip. When making the connection, adhere to the polarity designations shown on the label or wiring diagram. The input signal can be 0 – 10 VDC or 4 – 20 mA, and can be used to control the firing rate or set point, refer to 6.E.4 on page 36. The factory default setting is for a 0 – 10VDC signal. Configure for 4 – 20 mA by placing a jumper on CN20 on the control board, see Figure 11 on page 22.

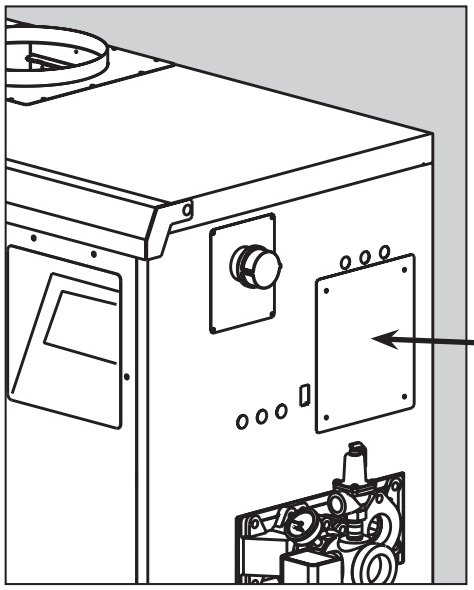

Figure 10. Access Panel to Input and Output Terminal Strips

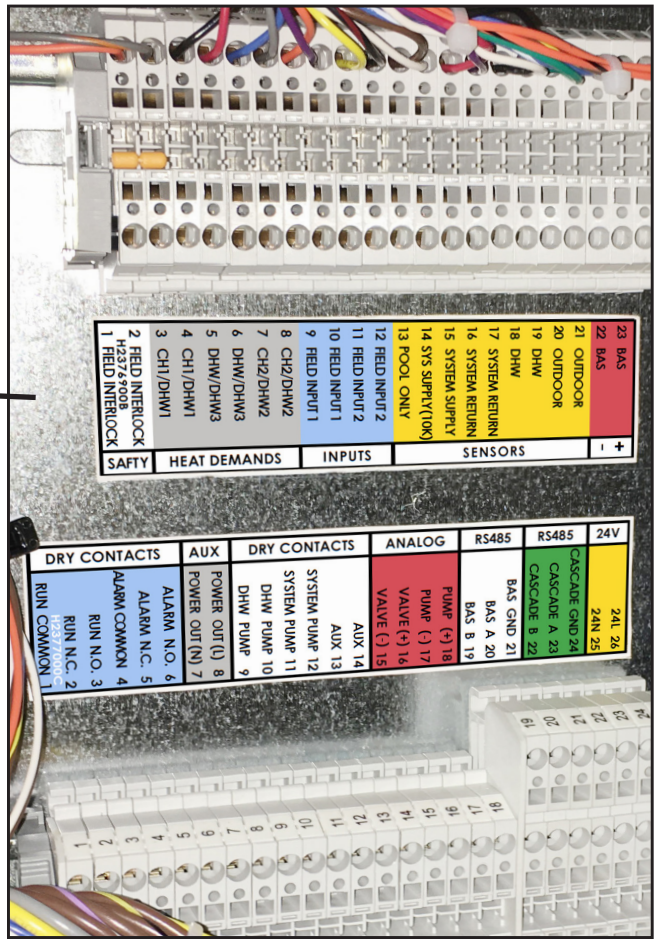

Detail of Terminal Strips (behind access panel)

5.C.2 Field Wiring - Outputs

5.C.2.a Dry Contacts

Run: These contacts, when used, are connected to terminals 1 (common), 2 (normally closed), and 3 (normally open) of the output terminal strip. The controller closes the normally open set of contacts whenever the pool heater is running. This is typically used by a BMS to verify the pool heater is satisfying a heat demand. Contact ratings are 250VAC, 0.6A maximum.

Alarm: These contacts, when used, are connected to terminals 4 (common), 5 (normally closed), and 6 (normally open) of the output terminal strip. The controller closes the normally open set of contacts whenever the pool heater is locked out or power is turned off. Contact ratings are 250VAC, 0.6A maximum.

System Pump: When connecting a system pump, use terminals 11 and 12 of the output terminal strip. As this is a dry contact, the system pump contact must be wired with either the system pump supply voltage or the system pump relay coil voltage. System pump functionality is configured using the touch screen. Contact ratings are 250VAC, 1.5A maximum.

AUX: These contacts, when used are connected to terminals 13 and 14 of the output terminal strip. The controller closes this contact when Field Input 1 is closed; otherwise, this contact remains open. Contact ratings are 250VAC, 1.5A maximum.

5.C.2.b BMS RS485 (BACnet MS/TP or Modbus)

These terminals, when used, are for RS485 serial communication with a BMS system using BACnet MS/TP or Modbus protocols. Use 2-wire twisted pair, shielded w/drain, communication cable between the BMS and controller of the pool heater.

5.C.2.c 24VAC

There are terminals for 24VAC on the output terminal strip. These terminals are reserved for low-temp models or a low water cutoff option kit.

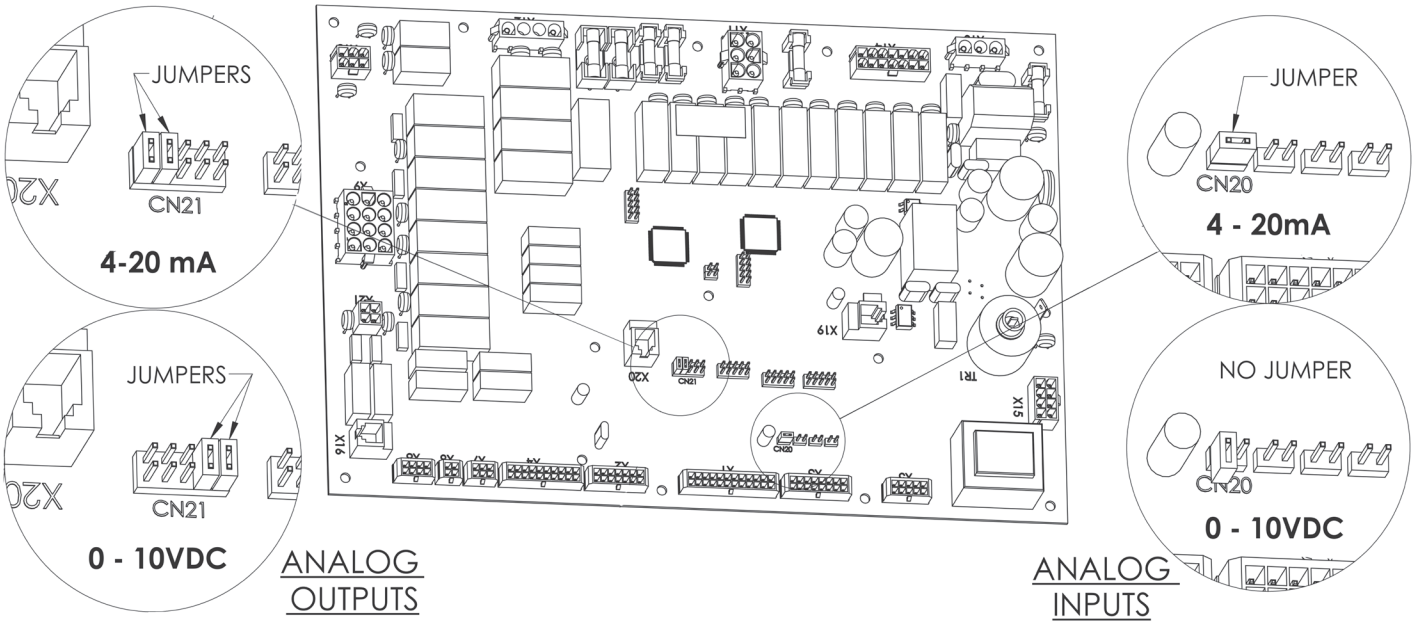

Figure 11. Analog Input and Output Jumper Placement

5.D BMS Wiring Connections

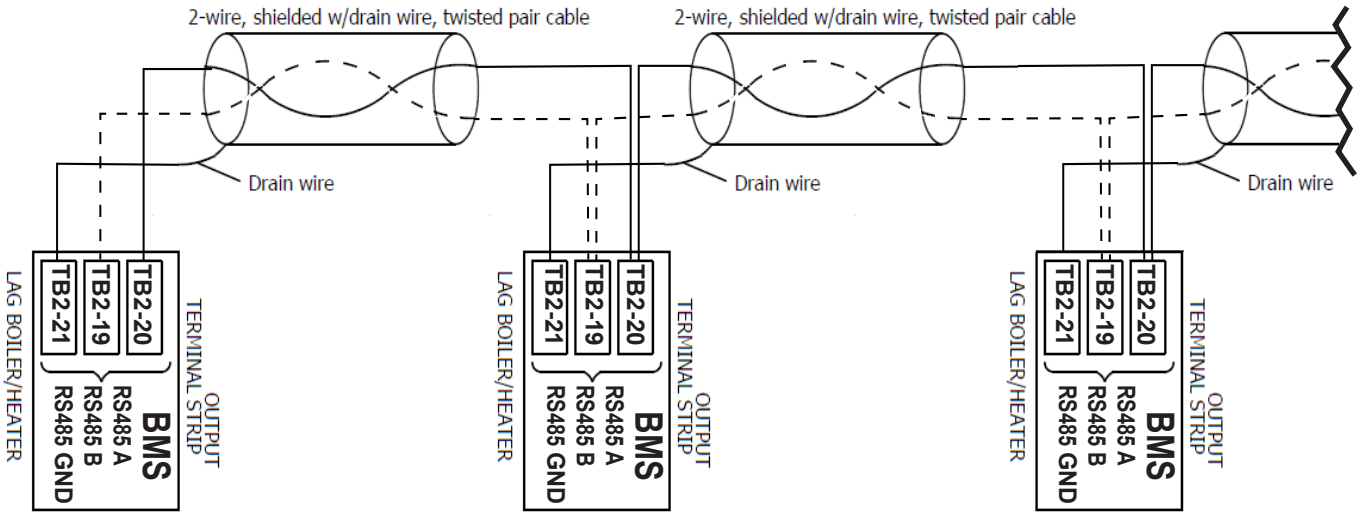

Figure 12. BMS Wiring Connections, Cascaded

5.E Wiring Diagram

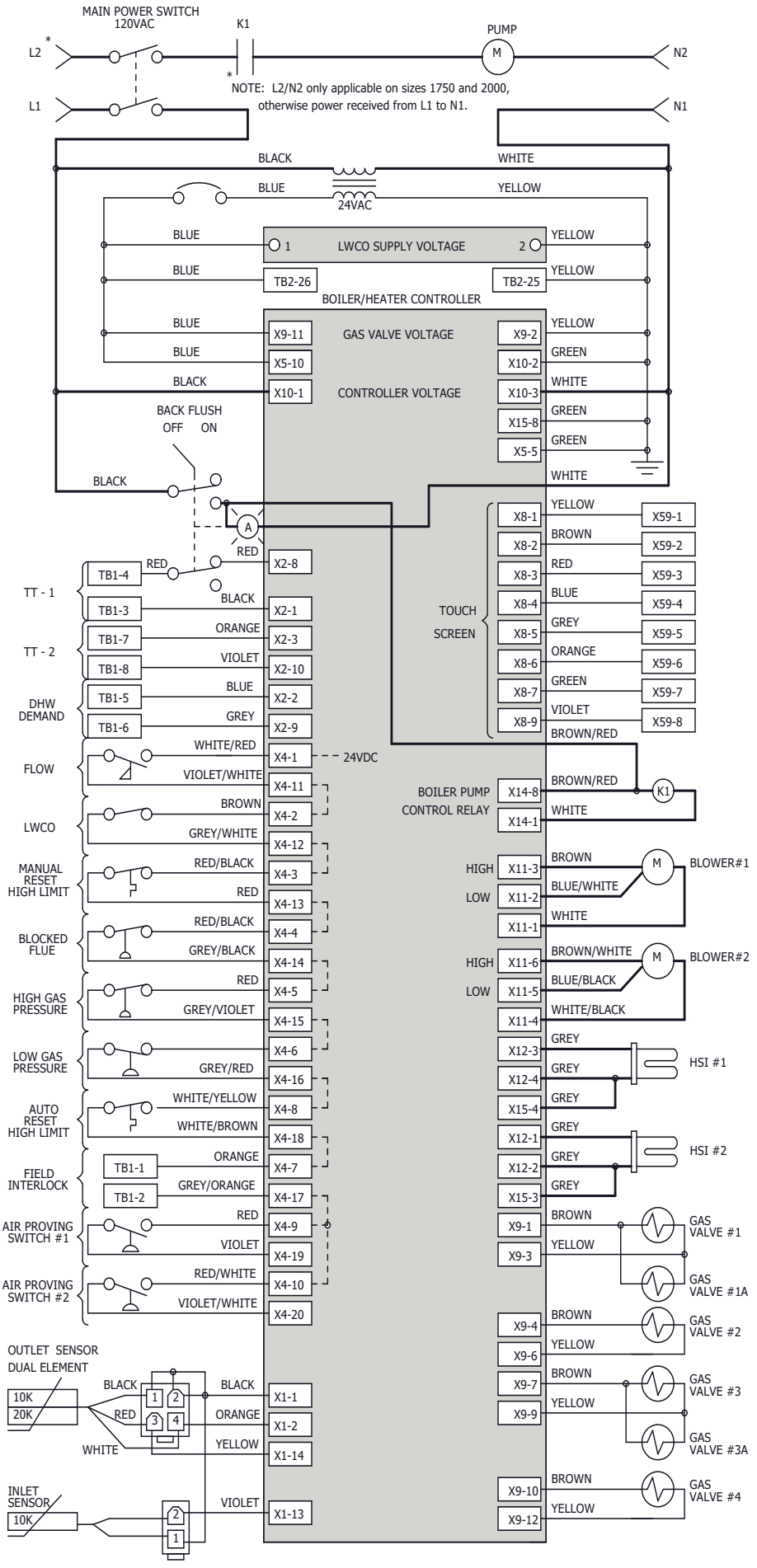

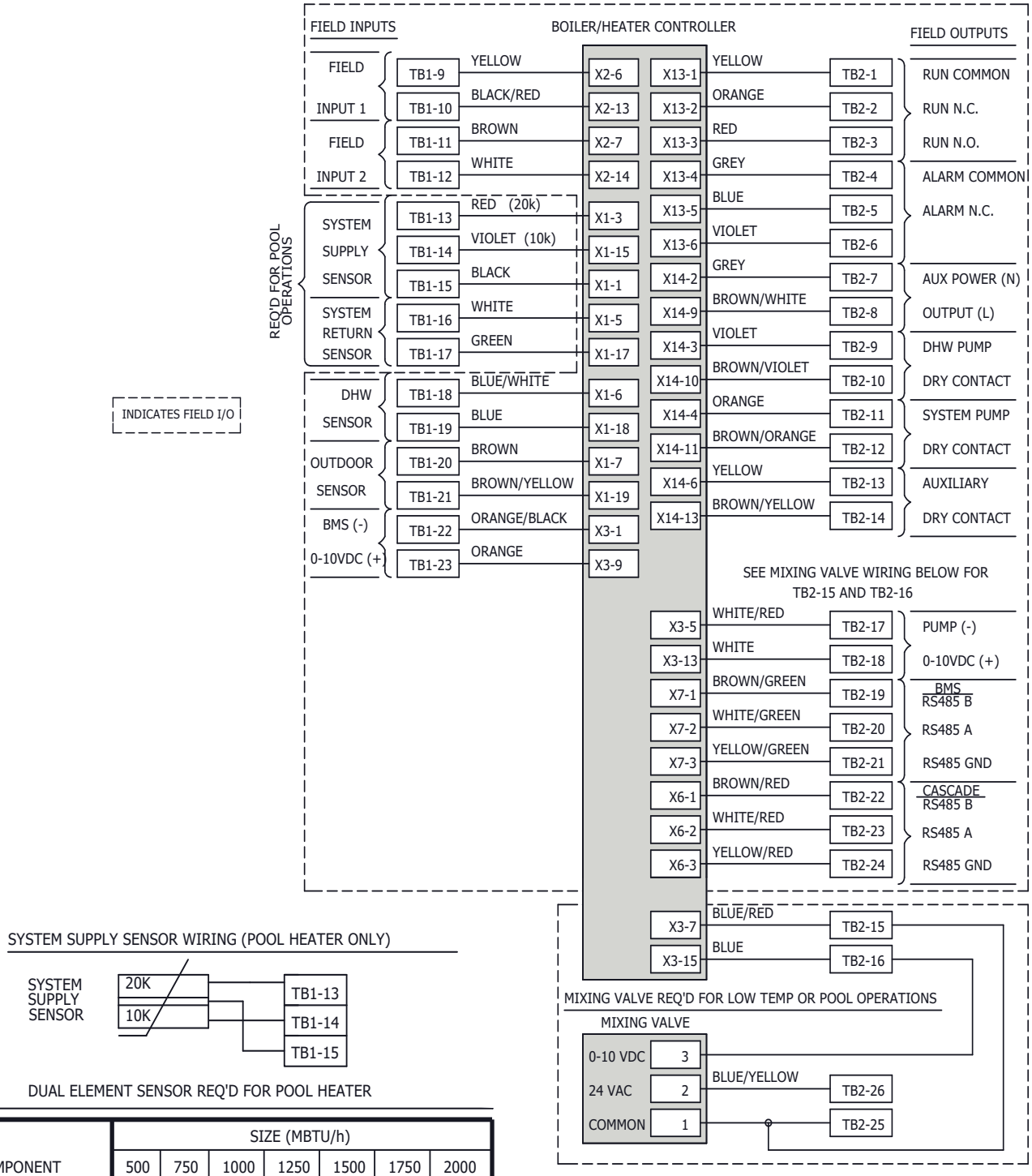

SYSTEM SUPPLY SENSOR WIRING (POOL HEATER ONLY)

DUAL ELEMENT SENSOR REQ'D FOR POOL HEATER

COMPONENT	SIZE (MBTU/h)						
	500	750	1000	1250	1500	1750	2000
BLOWER #1	X	X	X	X	X	X	X
BLOWER #2	N/A	N/A	N/A	X	X	X	X
HSI #1	X	X	X	X	X	X	X
HSI #2	N/A		X	X	X	X	X
GAS VALVE #1	X	X	X	X	X	X	X
GAS VALVE #1A	N/A	X	N/A	X	X	X	X
GAS VALVE #2	X	X	X	X	X	X	X
GAS VALVE #3	N/A	N/A	X	X	X	X	X
GAS VALVE #3A	N/A	N/A	N/A	N/A	N/A	X	X
GAS VALVE #4	N/A	N/A	N/A	X	X	X	X

Figure 13. Wiring Diagram. Sizes 500 - 2000.

5.F Ladder Diagram

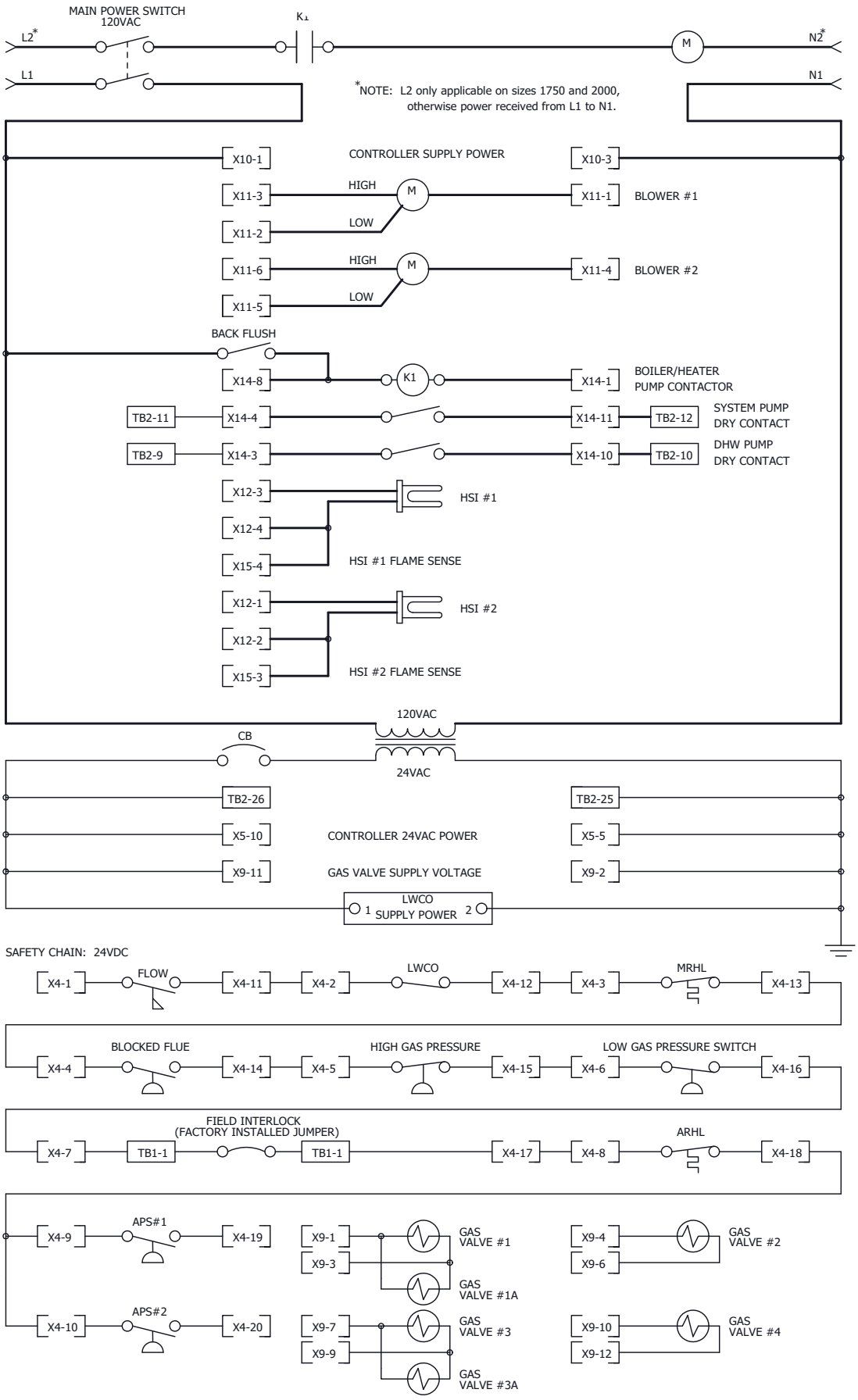

Figure 14. Ladder Diagram.

COMPONENT	SIZE (MBTU/h)						
	500	750	1000	1250	1500	1750	2000
BLOWER #1	X	X	X	X	X	X	X
BLOWER #2	N/A	N/A	N/A	X	X	X	X
HSI #1	X	X	X	X	X	X	X
HSI #2	N/A	N/A	X	X	X	X	X
GAS VALVE #1	X	X	X	X	X	X	X
GAS VALVE #1A	N/A	X	N/A	X	X	X	X
GAS VALVE #2	X	X	X	X	X	X	X
GAS VALVE #3	N/A	N/A	X	X	X	X	X
GAS VALVE #3A	N/A	N/A	N/A	N/A	N/A	X	X
GAS VALVE #4	N/A	N/A	N/A	X	X	X	X

INDICATES FIELD I/O

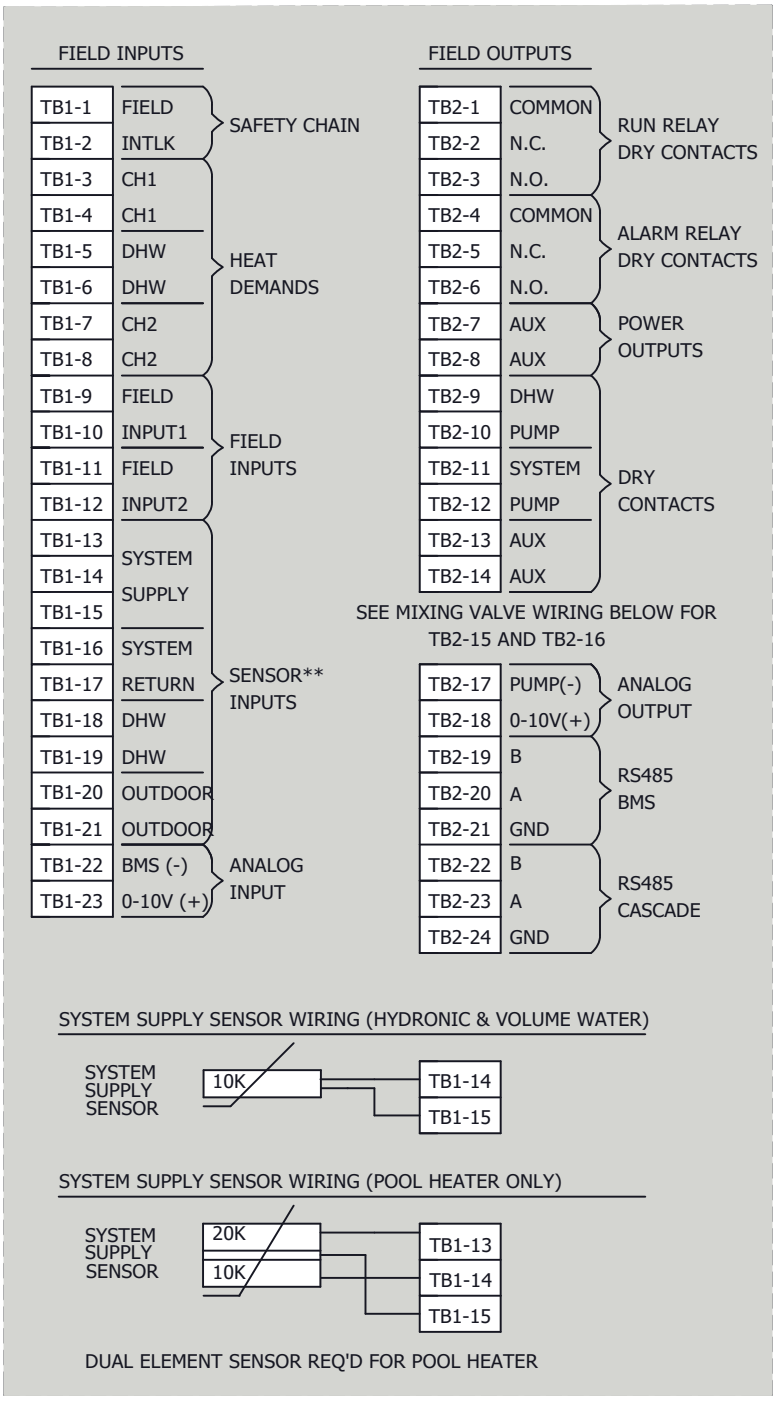

**SYSTEM SUPPLY AND RETURN SENSORS ARE REQ'D FOR POOL OPERATIONS

Voltage Legend	
120 VAC	
Low Voltage	

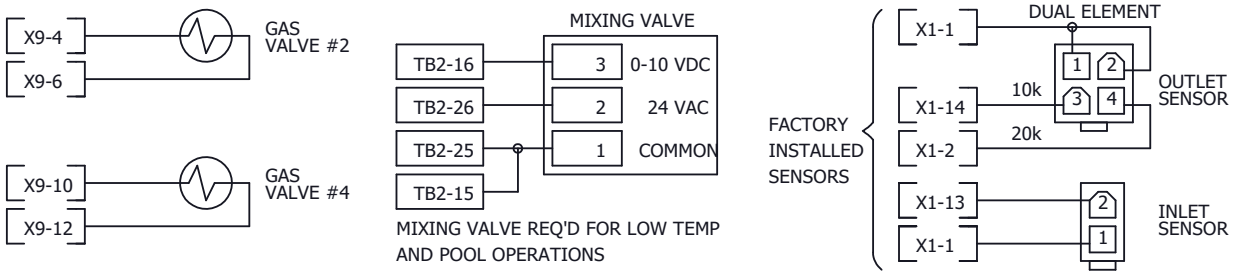

Figure 15. Logic Diagram.

SECTION 6 Touchscreen and System Operations

6.A The Home Screen

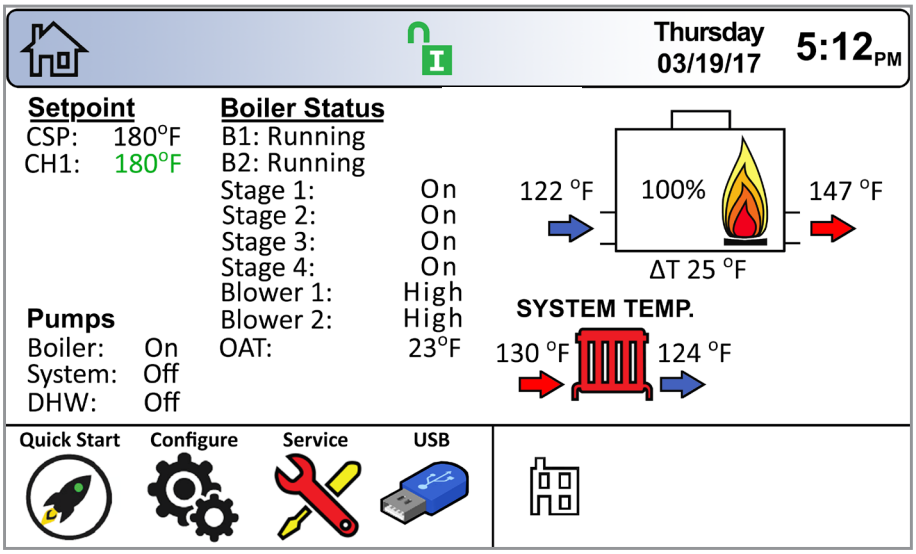

Figure 16. The Home Screen

6.A.1 Home Screen Status Window

The central area of the home screen displays the current status information for the unit.

Heat Demand Set Points.

Pump Status.

Boiler Status (Boiler Bank).

System Temp.

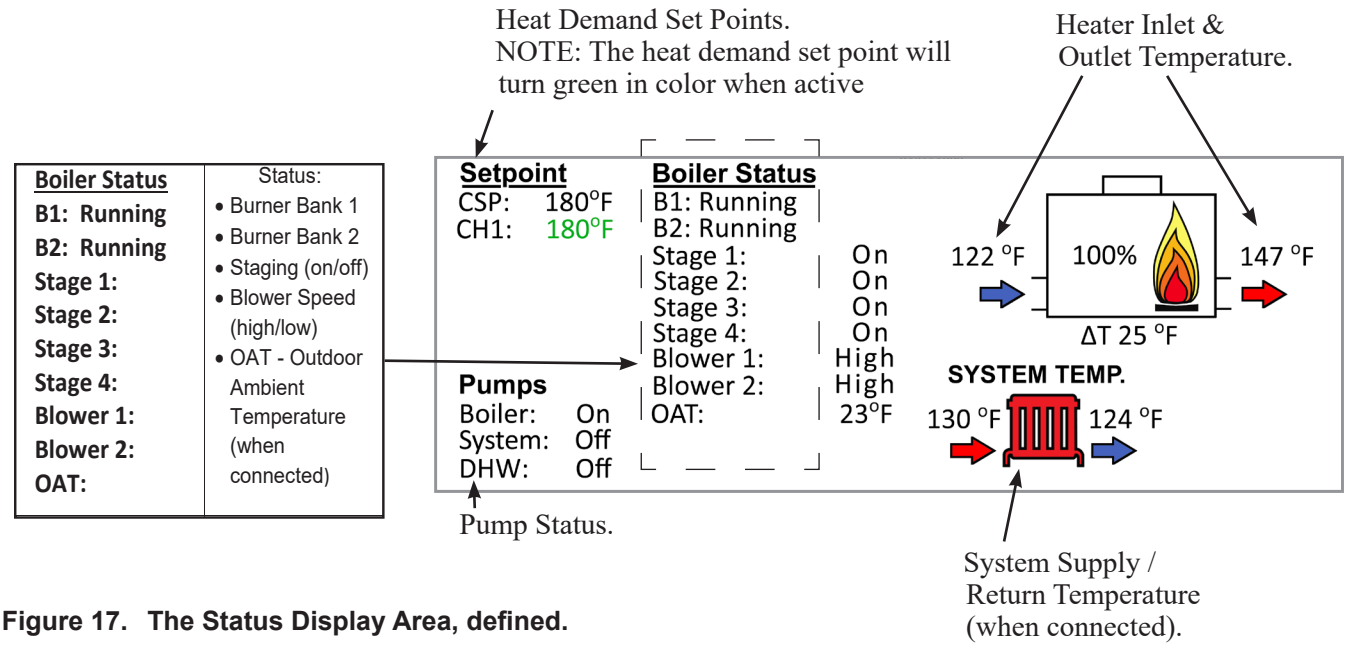

Figure 17. The Status Display Area, defined.

6.A.2 Home Screen Active Icons

Name	Icon	Description
Security		Displays the current lock status. Touch the lock icon to lock or unlock the Touchscreen Display. See **Section 6.B on page 30**
Quick Start		Provides quick touch access to the most commonly used parameters for easy installation. See **Section 6.D on page 32**
Configure		Will take you to ALL of your configurations and parameters for a detailed setup of the unit. This is the largest group of menu screens. See **Section 6.E on page 34**
Service		Allows the service technician to access the basic diagnostic and troubleshooting information. See **Section 6.F on page 41**
Messages	 	Will show an 'Exclamation' when there is a message. Clicking onto the Message icon will take you to the message itself. The USB functionality will show the USB Icon at this location, if being used. See **Section 6.G on page 43**
Active Demands	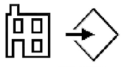	Will show icons that indicate the active parameters that are currently in demand. See **Section 6.H on page 45**
Navigation Bar	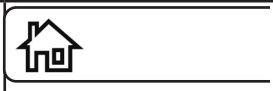	The Navigation Bar is the constant indicator of where you are as you navigate into and out of the touchscreens. See **Section 6.I on page 45** **ERROR** Codes also show in the ***Navigation Bar*** when there is one of several unit errors or shut-downs that have occured.
Date & Time	Thursday 03/19/17 5:12 PM	For Display Only. To change date and time, go to the Configuration menu. **Section 6.J on page 45**

Table 10. The Active Icons on the Home Screen, and what they do.

6.B Lock / Unlock Display Screen

Password Protection:

To change parameters, a password is required. The control system includes three levels of password protection. Touch the 'Current Lock Status' Icon.

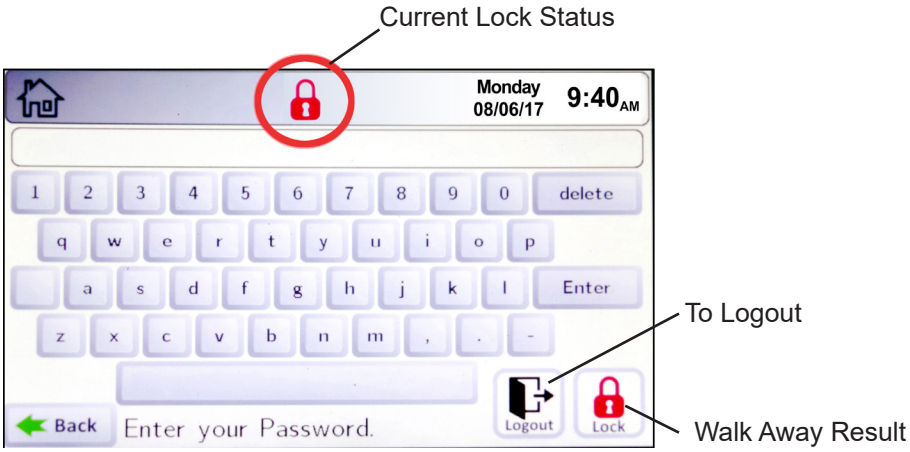

Screen 1. Sign in Screen

-USER Password: Non-critical adjustments and functions. **The user password is lhs.** When unlocked in the User mode, the icon will change to-

-INSTALLER Password: Setup and parameter changes made during the initial setup and commissioning. **The installer password is 17.** When unlocked in the Installer mode, the icon will change to-

-OEM Password: Setup and parameter changes available only to the factory.

Walk-Away Result. The unit will either Lock or stay Un-locked if you walk away. What it will do is displayed in the bottom right corner. The default delay time to lock is 5 minutes of inactivity. This time duration can be adjusted in Service -> Screen -> Auto Lock Timeout. And it can also be set up to never Lock.

Lock Unlock

If the Installer is done and wants to lock the display immediately, tap the Logout Icon to get out of Installer or User Mode.

Logout

6.C Keypad Operations

As you navigate in, you find that all screens have either a numeric keypad to enter in your customizable parameters OR selection buttons to choose the options for your configuration.

NOTE: You can always tell exactly where you have navigated to by looking at the icons in the ***Navigation Bar.***

In this example you are in

Home/Configure/Central Heat/Central Heat One

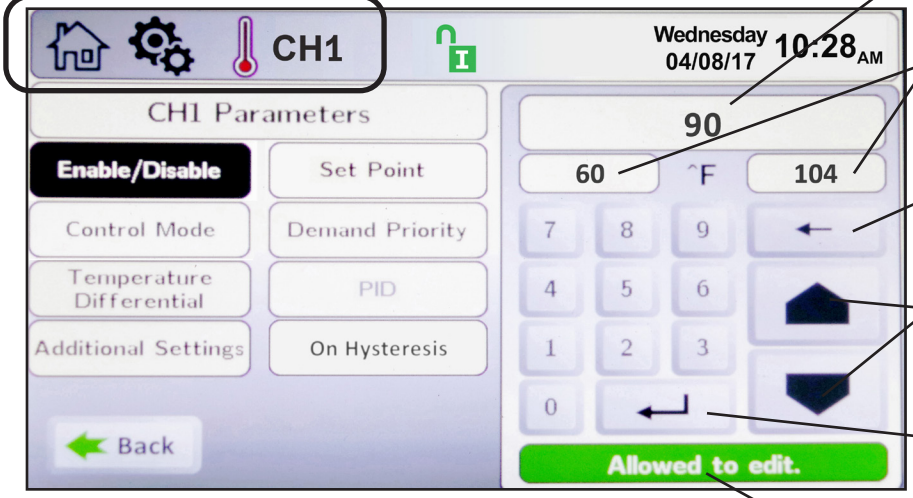

Shows the current setting of the Parameter.

These windows will reflect the allowable ranges that the setting can be adjusted to.

To delete the current setting before entering in the new value.

"Up and Down" arrows are used to increment the setting accordingly.

The "Enter" button is used to accept the new value that was just entered.

This is the indicator that will be shown when the correct password has been entered to allow the setting to change.

Screen 2. A typical numeric keypad entry screen.

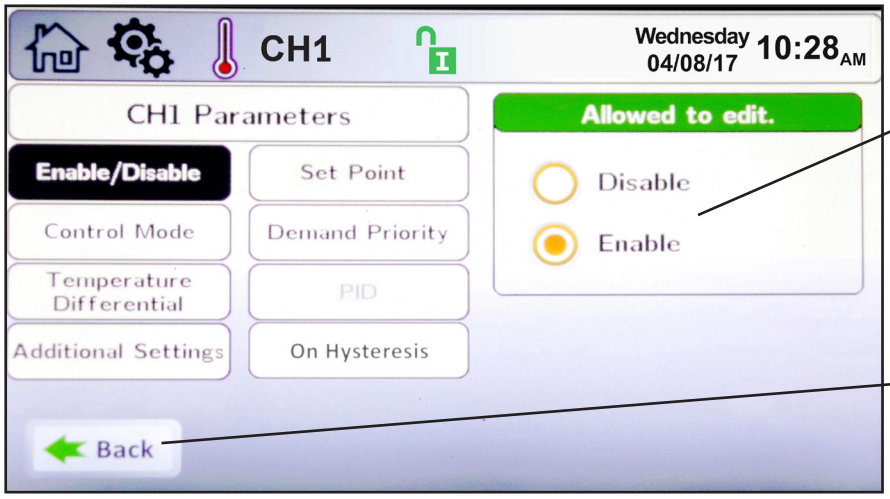

The highlighted button (orange) shows which one is selected. Some screens may only allow you to set one or the other, while some other screens (example: pump selection) will allow you to select any or all of the options.

The "Back" button jumps to the previous screen.

Screen 3. A typical selection screen.

6.D Quick Start

To navigate to the Quick Start Screen, touch the Quick Start Icon in the lower left-hand portion of the Home Screen.

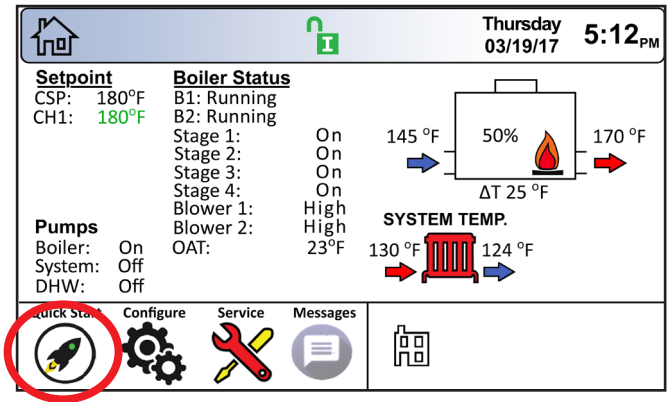

Screen 4. Home Screen

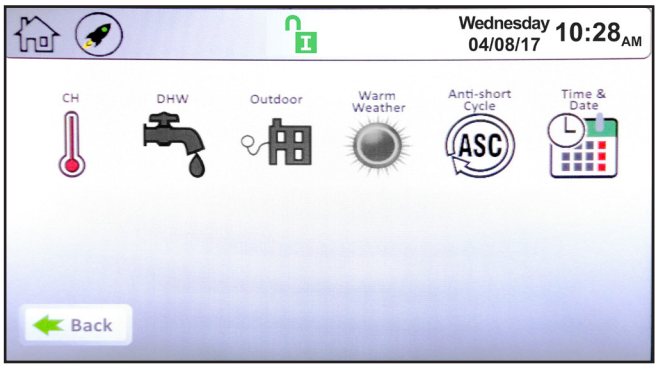

Screen 5. Quick Start Screen

6.D.1 CH

On the Quick Start Screen, touch the CH thermometer icon to navigate to the CH Selection Screen

There are two identical heat demands, CH1 and CH2, each with independent control algorithms and independent inputs on the input terminal strip, see Figure 10 on page 21.

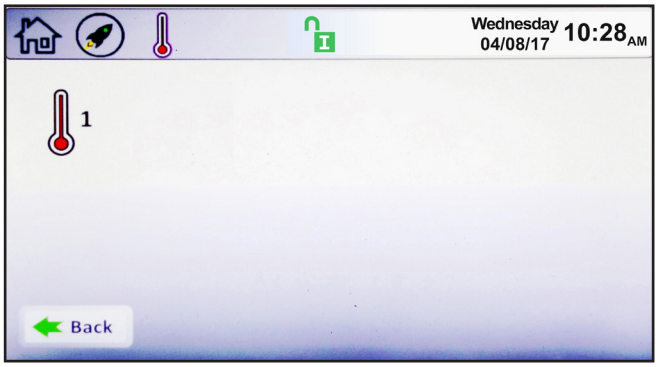

Screen 6. CH Quick Start Selection Screen

Touching CH1 navigates to the CH1 Quick Start Screen

6.D.1.a CH1 1

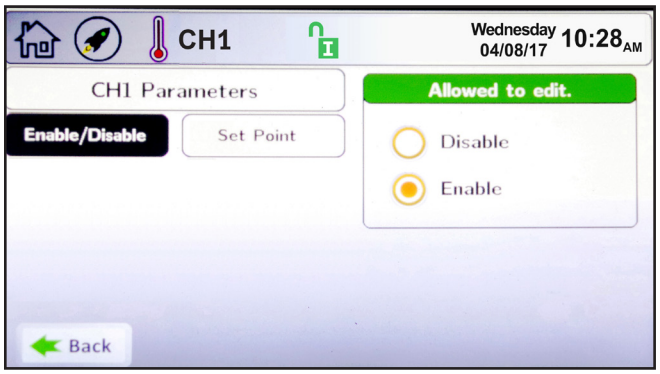

Screen 7. CH1 Quick Start Screen

- **Enable/Disable** – This allows CH1 to be enabled/disabled. The default setting is Enabled.
- **Set Point** – This is the temperature that this heat demand will control to.

6.D.2 Anti-Short Cycle

To navigate to the Anti-Short Cycle Quick Start Screen, touch the Anti-Short Cycle Icon on the Quick Start Screen.

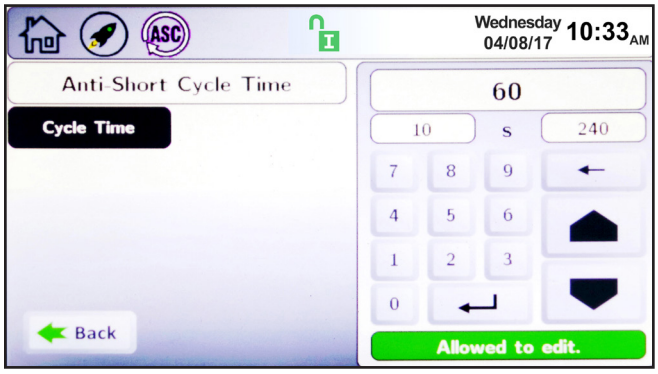

Screen 8. Anti-Short Cycle Quick Start Screen

The Anti-Short Cycle Quick Start Screen allows adjustment of the following parameter:

- **Cycle Time** – The amount of time after a heat demand is satisfied that the pool heater will wait to satisfy the next active heat demand.

NOTE: Anti-Short Cycle Time does not apply to DHW/DHW3 heat demands.

6.D.3 Time & Date

To navigate to the Time & Date Quick Start Screen, touch the Time & Date Icon on the Quick Start Screen.

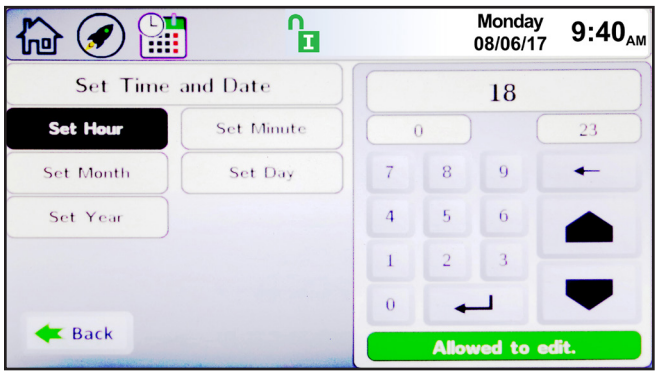

Screen 9. Time & Date Quick Start Screen

NOTE: The Time is set in a 24 hour parameter, but displays only as a 12 hour clock with the AM/PM automatically added.

The Time & Date Quick Start Screen allows adjustment of the following parameters:

- **Hour** – The hour that will be displayed in the upper banner on each screen, and the time captured in the date/time stamp for lock-out conditions displayed on the history screen.
- **Minute** – The minute that will be displayed in the upper banner on each screen, and the time captured in the date/time stamp for lock-out conditions displayed on the history screen.
- **Month** – The month that will be displayed in the upper banner on each screen, and the date captured in the date/time stamp for lock-out conditions displayed on the history screen.
- **Day** – The day that will be displayed in the upper banner on each screen, and the date captured in the date/time stamp for lock-out conditions displayed on the history screen.
- **Year** – The month that will be displayed in the upper banner on each screen, and the date captured in the date/time stamp for lock-out conditions displayed on the history screen.

6.E Configure Screen

To navigate to the Configure Screen, touch the Configure Icon in the lower left-hand portion of the Home Screen.

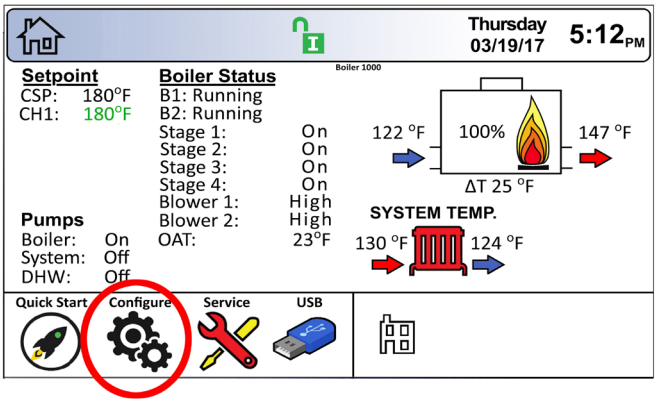

Screen 10. Home Screen

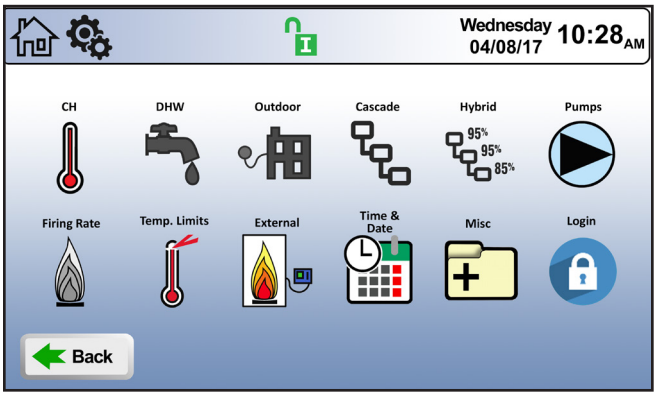

Screen 11. Configure Screen

From the Configure Screen, the pool heaters functionality can be configured for the specific application/installation. The following sections give an overview of each configuration sub menu.

6.E.1 CH

On the Configure Screen, touch the CH thermometer icon to navigate to the CH Selection Screen

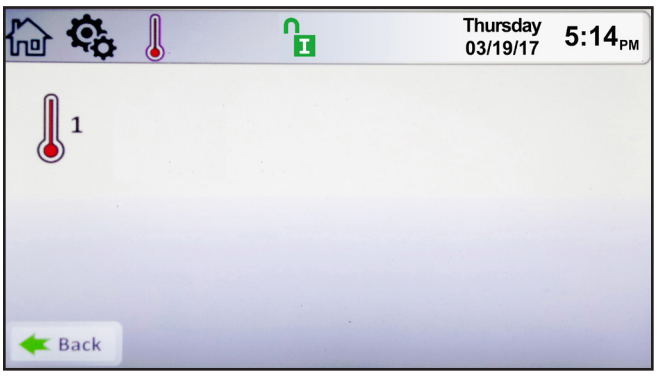

Screen 12. CH Selection Screen

6.E.1.a CH1

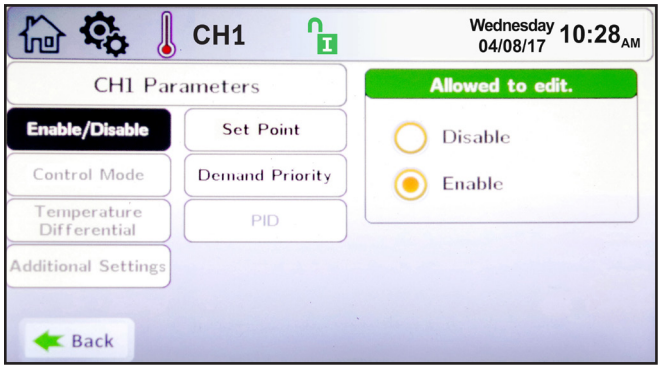

Screen 13. CH1 Configuration Screen

The CH1 Configuration Screen allows adjustment of the following parameters:

- **Enable/Disable** – This allows CH1 to be enabled/disabled. The default setting is Enabled.
- **Set Point** – This is the temperature that this heat demand will control to.
- **Demand Priority** – This allows the user to prioritize the heat demand, such as External before CH. The higher the number, the higher the priority. See Table 11

Heat Demand	Source: Pool Heater	Priority
TT1	CH1	60
External Demand	Analog Input (0 – 10VDC/4 – 20mA)	20
Frost Protection	Inlet Temperature	10

Table 11. Demand Priority

6.E.2 Pumps

This pool heater allows control of three pumps: boiler/heater pump, system pump, and DHW pump. Each pump has an adjustable post circulation time that allows the pump to run after a heat demand has been satisfied or a shutdown condition has occurred. See Sections 5.2.2 and 5.3.2.1 For wiring information, see Section 6.2.6 pump configuration information.

Boiler/Heater Pump

Upon a heat demand, the boiler/heater pump can be configured to operate as follows:

Auto – the pump will turn on automatically upon a call for heat.

Always On – the pump will run continuously, with or without a heat demand.

Off During DHW – the pump will not turn on during a DHW heat demand.

DHW Pump

Upon a heat demand, the boiler/heater pump can be configured to operate as follows:

Auto – the pump will turn on automatically upon a call for heat.

Always On – the pump will run continuously, with or without a heat demand.

Disable – the pump will not turn on upon a DHW heat demand.

System Pump

Upon a heat demand, the system pump can be configured to operate as follows:

Auto – the pump will turn on automatically upon a call for heat.

Always On – the pump will run continuously, with or without a heat demand.

Off During DHW – the pump will not turn on during a DHW heat demand.

Disable – the pump will not turn on during a call for heat.

To navigate to the Pump Configuration Screen, touch the Pump Icon on the Configure Screen.

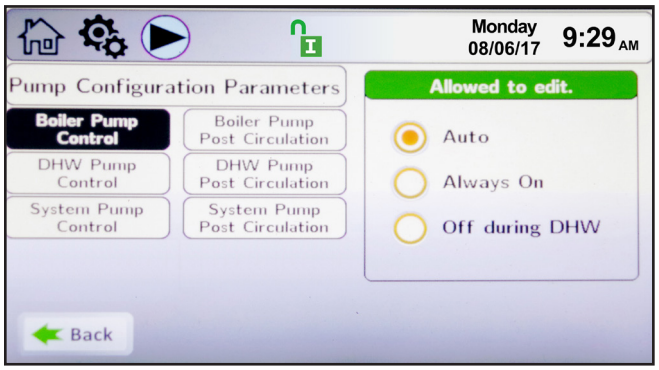

Screen 14. Pump Configuration Screen

The Pump Configuration Screen allows adjustment of the following parameters:

- **Boiler Pump Control –** The parameter provides the ability to set the boiler pump functionality to be: Auto, Always On, or Off during DHW.
- **Boiler Pump Post Circulation –** This parameter is the amount of time the boiler/heater pump will continue to run after a heat demand has been satisfied or after a lock-out condition has occurred.
- **DHW Pump Control –** This parameter provides the ability to set the DHW pump functionality to be: Auto, Disabled, or Always On.
- **DHW Pump Post Circulation –** This parameter is the amount of time the DHW pump will continue to run after a heat demand has been satisfied or after a lock-out condition has occurred.
- **System Pump Control –** This parameter provided the ability to set the system pump functionality to be: Auto, Always On, Off during DHW, or Disabled.
- **System Pump Post Circulation –** This parameter is the amount of time the System pump will continue to run after a heat demand has been satisfied or after a lock-out condition has occurred.

6.E.3 Temp Limits

To navigate to the Temp Limits Configuration Screen, touch the Temp Limits Icon on the Configure Screen (2nd Row).

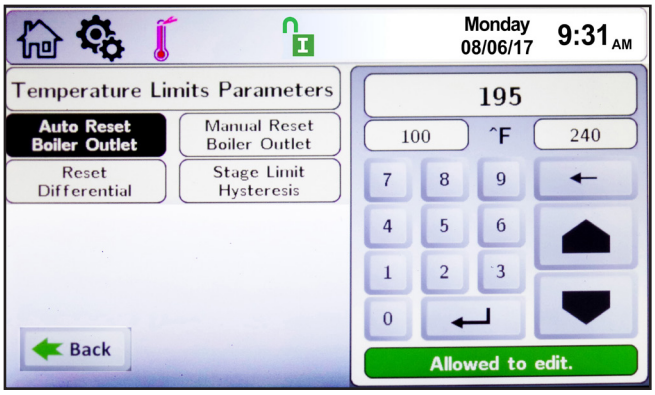

Screen 15. Temp Limits Configuration Screen

The Temp Limits Configuration Screen allows adjustment of the following parameters:

• **Auto Reset Boiler Outlet–** The temperature at which the pool heater will shutdown on an outlet temperature auto reset condition.

• **Manual Reset Boiler Outlet–** The temperature at which the pool heater will shut down on an outlet temperature manual reset condition.

• **Auto Reset System –** The temperatrue at which the heater will shutdown based on the system supply temp.

• **Reset Differential –** The value below the Auto Reset temperature at which the pool heater will automatically reset itself and resume functionality.

6.E.4 External

To navigate to the External Configuration Screen, touch the External Icon on the Configure Screen.

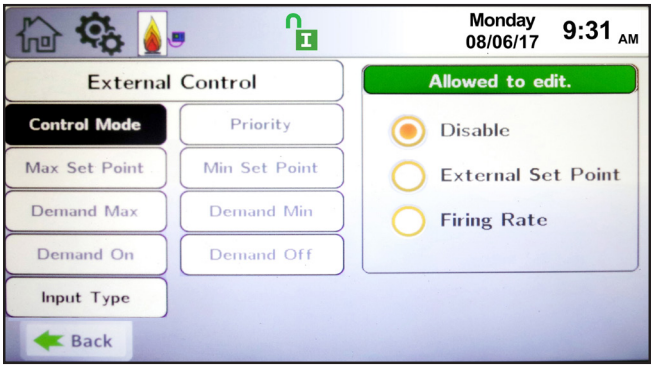

Screen 16. External Configuration Screen

The External Configuration Screen applies to the 0-10VDC (4-20mA) analog input BMS signal, and allows adjustment of the following parameters:

• **Control Mode –** This parameter provides the ability to either disable external control or configure the Pool Heater for External Set Point or Firing Rate control mode.

• **Priority –** This parameter sets the heat demand priority in relation to other heat demands. The higher the number, the higher the priority it is assigned.

• **Max Set Point –** When the Control Mode is set to External Set Point, this is the maximum value that corresponds to the Demand Max value.

• **Min Set Point –** When the Control Mode is set to External Set Point, this is the minimum value that corresponds to the Demand Min value.

• **Demand Max –** This is the maximum value that corresponds to the control mode selected. With Firing Rate control mode selected, this is the maximum rate at which the boiler/heater will run. The unit of this parameter is %, so if the value of this parameter is 10000, or 100.00%, this equates to 10.0VDC or 20mA.

• **Demand Min –** This is the minimum value that corresponds to the control mode selected. With Firing Rate control mode selected, this is the minimum rate at which the boiler/heater will run. The unit of this parameter is %, so if the value of this parameter is 2000, or 20.00%, this equates to 2.0VDC or 4.8mA.

• **Demand On –** This is the threshold (VDC/mA) at which the input signal will initiate the selected control mode behavior. The unit of this parameter is %, so if the value of this parameter is 1500, or 15.00%, this equates to 1.5VDC or 4.6mA.

• **Demand Off –** This is the threshold (VDC/mA) at which the input signal will deactivate the selected control mode behavior. The unit of this parameter is %, so if the value of this parameter is 1000, or 10.00%, this equates to 1.0VDC or 4.4mA.

• **Input Type –** This parameter allows the user to select between voltage (0-10VDC) and current (4-20mA) input. Jumpers will need to be configured accordingly. See 5.C on page 20

6.E.4.a External – Remote Set Point

With External Set Point selected, the pool heater will initiate a heat demand once the analog input signal exceeds the Demand On value. Once the demand is initiated, the analog input signal must be lower than Demand Off to remove the heat demand. With an active demand, the pool heater will linearize the set point according to the analog input signal as shown in **Figure 18.**

Using the default values for Boiler Max Set Point (180°F), Boiler Min Set Point (140°F), Demand Minimum (2.5VDC), Demand Maximum (10.0VDC), the pool heater will linearize the set point, according to the formula in **Figure 18**.

External (0 – 10VDC or 4 – 20mA)

An External heat demand can be initiated by a Building Management System (BMS) using a 0 – 10 VDC or 4 – 20 mA signal. This input can be configured for Remote Set Point or External Firing Rate operations. See Section 5.C.1.e on page 20 for wiring and Section 6.E.6.c on page 39 for configuration information.

NOTE: Since Pool Heaters are On/Off, using external firing rate will turn all stages on/off once the Demand On Value has been exceeded.

6.E.4.b External Firing Rate

With External Firing Rate selected, the Pool Heater will initiate a heat demand once the analog input signal exceeds the Demand On value.

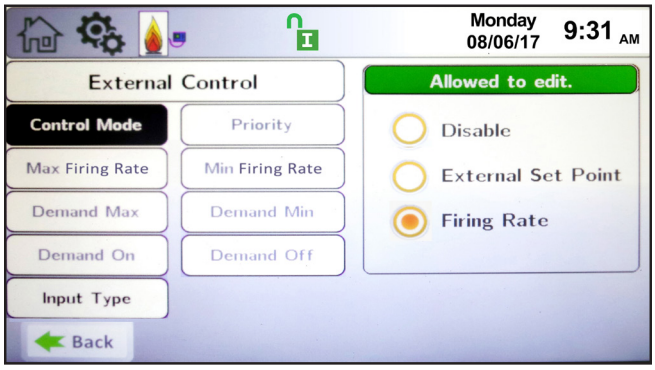

Screen 17. External Firing Rate

Once the demand is initiated, the analog input signal must be lower than Demand Off to remove the heat demand. In this control mode, if the Pool Heater outlet temperature exceeds the Auto Reset High Limit setting, the water heater will shut down and an "Auto Reset High Limit" condition will annunciate on the Messages screen. Once the outlet temperature decreases below the value of (Auto Reset High Limit – Reset Differential), the boiler will turn back on at the firing rate set by the analog input signal.

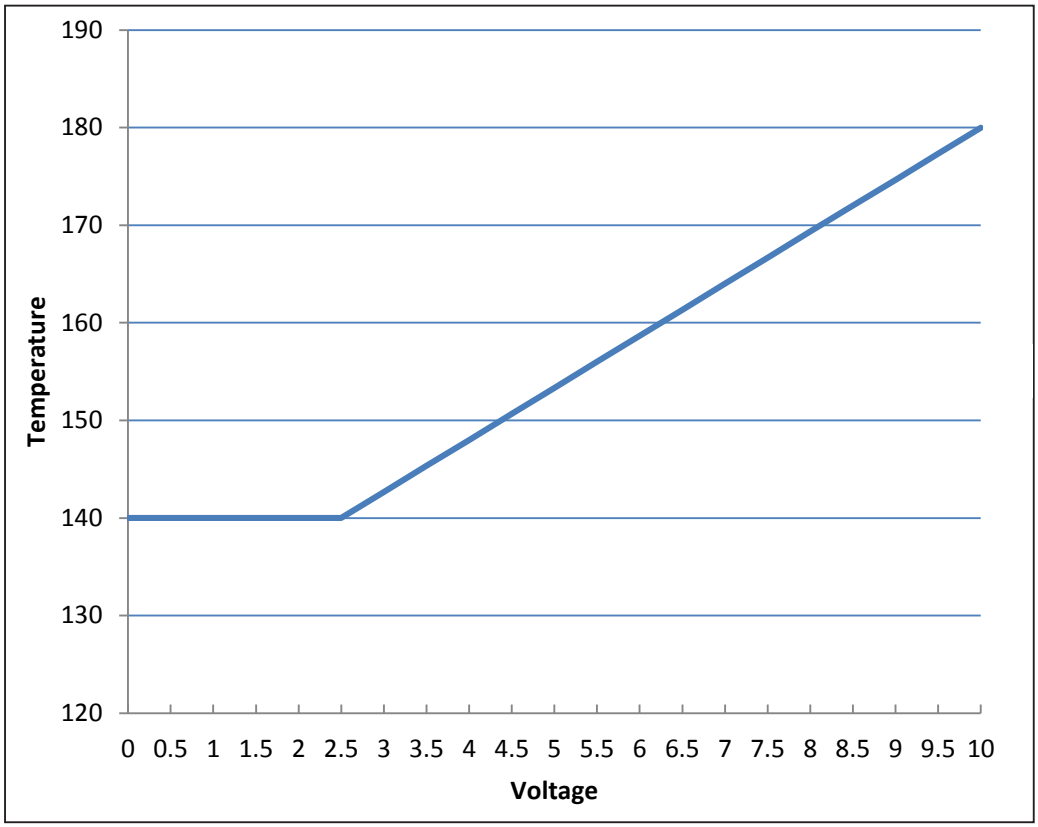

Figure 18. External Control Mode and Temperature

6.E.5 Setting the Time and Date

To navigate to the Time & Date Configuration Screen, touch the Time & Date Icon on the Configure Screen.

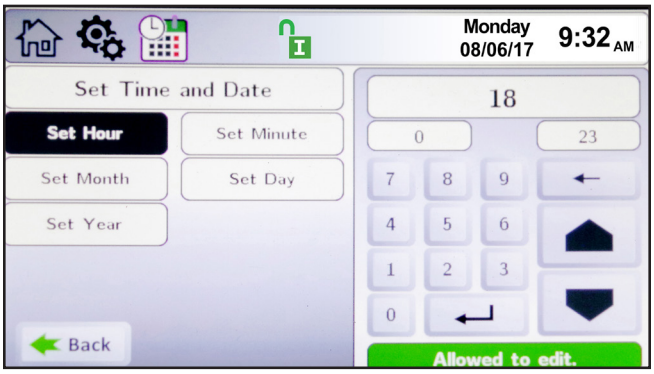

Screen 18. Time & Date Configuration Screen

NOTE: The Time is set in a 24 hour parameter, but displays only as a 12 hour clock with the AM/PM automatically added.

The Time & Date Configuration Screen allows adjustment of the following parameters:

•**Hour –** The hour that will be displayed in the upper banner on each screen, and the time captured in the date/time stamp for lock-out conditions displayed on the history screen.

• **Minute –** The minute that will be displayed in the upper banner on each screen, and the time captured in the date/time stamp for lock-out conditions displayed on the history screen.

• **Month –** The month that will be displayed in the upper banner on each screen, and the date captured in the date/time stamp for lock-out conditions displayed on the history screen.

• **Day –** The day that will be displayed in the upper banner on each screen, and the date captured in the date/time stamp for lock-out conditions displayed on the history screen.

• **Year –** The month that will be displayed in the upper banner on each screen, and the date captured in the date/time stamp for lock-out conditions displayed on the history screen.

6.E.6 Miscellaneous Features

To navigate to the Miscellaneous Features Screen, touch the Miscellaneous Features Icon on the Configure Screen.

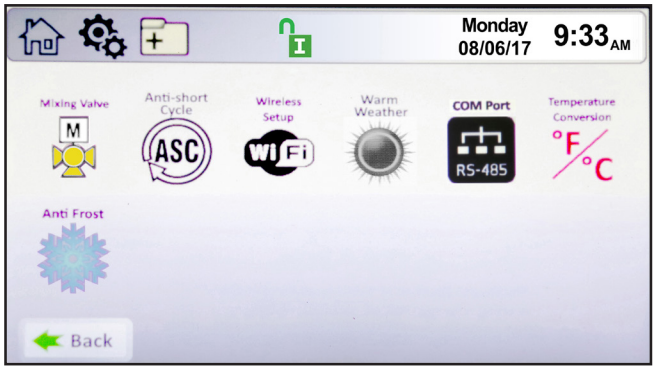

Screen 19. Miscellaneous Features Screen

The Miscellaneous Features screen provides navigation for the following items:

• **Mixing Valve –** This icon navigates to the Mixing Valve Screen.

• **Anti-short Cycle –** This icon navigates to the Anti-short Cycle Configuration Screen.

• **Wireless Setup –** This icon navigates to the Wireless Setup Screen, not available at this time.

• **BACnet –** This icon navigates to the BACnet Configuration Screen.

• **Temperature Conversion –** This icon navigates to the Temperature Conversion Configuration Screen.

• **Anti-Frost –** This icon navigates to the Anti-Frost Configuration Screen.

6.E.6.a Mixing Valve.

To navigate to the Mixing Valve Configuration Screen, touch the Miscellaneous Features Icon on the Configure Screen, then touch the Mixing Valve Icon on the Miscellaneous Features screen.

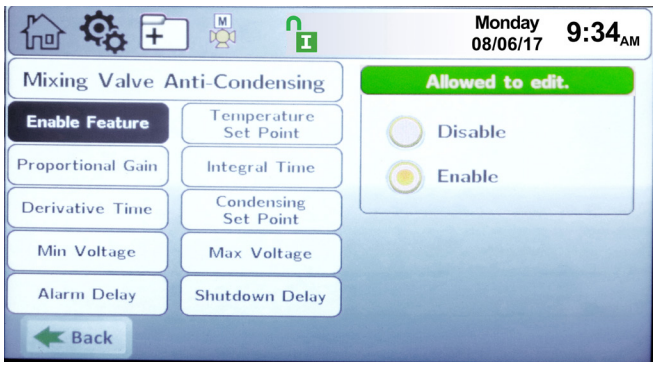

Miscellaneous Features Screen

The Mixing Valve Configuration Screen allows adjustment of the following parameters:

• **Enable Feature** – This allows the mixing valve

to be enabled or disabled.

• **Temperature Set Point** – The mixing valve will maintain this temperature at the inlet to the boiler/heater.

• **Proportional Gain** – This value is the corrective action that is proportional to the error (set point – control temperature).

• **Integral Time** – This value is applied to the sum of the error over a period of time.

• **Derivative Time** – The value is applied to the rate of change of the error.

• **Condensing Set Point** – The condensing alarm and shutdown are based on this set point.

• **Min Voltage** – The minimum voltage the controller will send the mixing valve.

• **Max Voltage** – The maximum voltage the controller will send the mixing valve.

• **Alarm Delay** – If the boiler/heater inlet temperature is below Condensing Set Point for the duration of the Alarm Delay time, the boiler/heater will annunciate a condensing alarm.

• **Shutdown Delay** – If the boiler/heater inlet temperature is below the Condensing Set Point for the duration of the Shutdown Delay time, the boiler/heater will shut down and annunciate a condensing shutdown condition.

6.E.6.b Anti-Short Cycle

To navigate to the Anti-Short Cycle Configuration Screen, touch the Miscellaneous Features Icon on the Configure Screen, then touch the Anti-Short Cycle Icon on the Miscellaneous Features screen.

After a heat demand has been satisfied, the pool heater will wait the duration of the Anti-Short Cycle Time before satisfying the next heat demand.

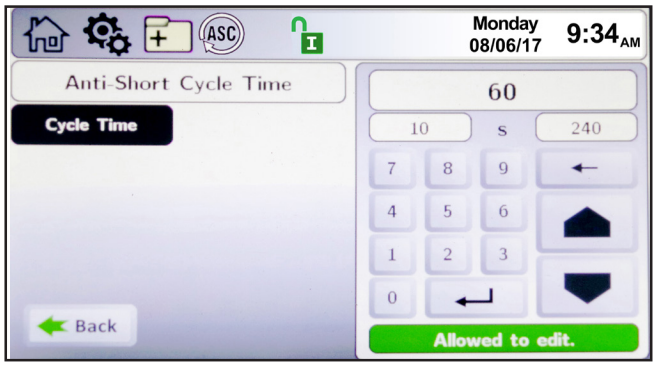

Screen 20. Anti-Short Cycle Configuration Screen

The Anti-Short Cycle Configuration Screen allows adjustment of the following parameter:

• **Cycle Time –** The amount of time after a heat demand is satisfied that the pool heater will wait to satisfy the next active heat demand.

6.E.6.c COM Port

To navigate to the COM Port Configuration Screen, touch the Misc Icon on the Configure Screen, then touch the COM Port Icon on the Misc Configuration Screen.

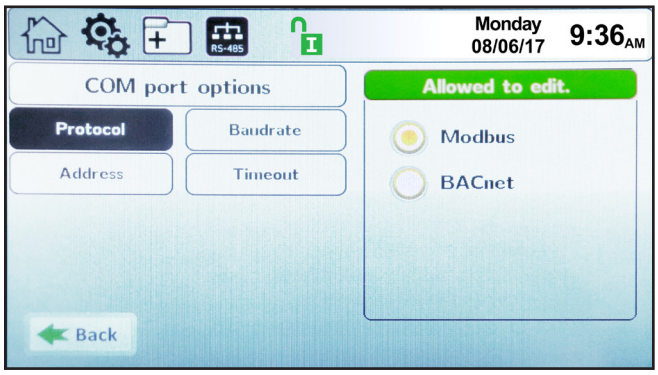

Screen 21. COM Port Config Screen, ModBus

The COM Port Configuration Screen allows adjustment of the following parameters:

• **Protocol –** Allows selection of either Modbus or BACnet MSTP protocols.

NOTE: Changing the protocol requires a power cycle of the unit for the change to take effect.

With Modbus protocol selected, the following parameters are adjustable on this screen:

• **Baudrate –** Modbus can be configured for the following standard baudrated: 9600, 19200, 38400, and 57600.

• **Address –** The address of the unit on the Modbus network.

• **Timeout –** Upon loss of communication, this is the duration of time in which the unit will wait prior to a timeout conditions occurring.

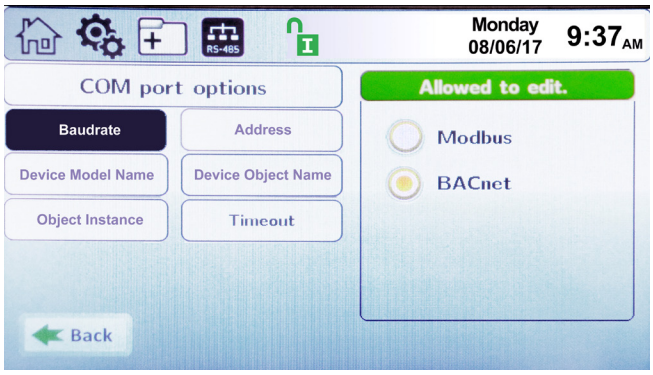

Screen 22. COM Port Config Screen, BACnet

With BACnet protocol selected, the following parameters are adjustable on this screen:

• **Baudrate –** BACnet can be configured for the following standard baudrates: 9600, 19200, 38400, and 76800.

• **Address –** The address of the unit on the BACnet

network.

- **Device Model Name –** The name of the Pool Heater Model on the BACnet network.
- **Device Object Name –** The name of the Pool Heater Object on the BACnet network.
- **Object Instance –** The object number of the Pool Heater on the BACnet network.
- **Timeout –** Upon loss of communication, this is the duration of time in which the pool heater will wait prior to a timeout conditions occurring.

6.E.6.d Temperature Conversion

To navigate to the Temperature Conversion Configuration Screen, touch the Miscellaneous Features Icon on the Configure Screen, then touch the Temperature Conversion Icon on the Miscellaneous Features screen.

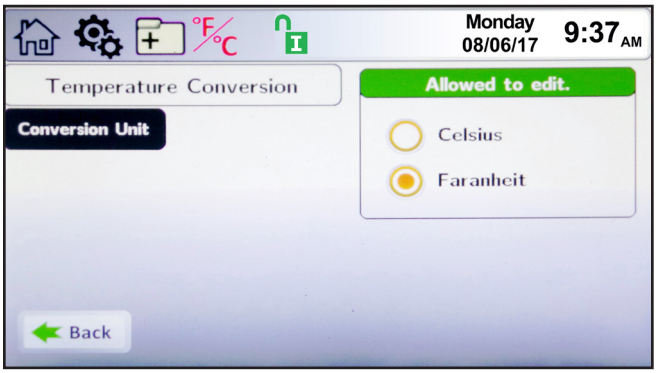

Screen 23. Temp Conversion Config Screen

The Temperature Conversion Configuration Screen allows adjustment of the following parameter:

• **Conversion Unit –** This parameter can be changed between Fahrenheit and Celsius.

6.E.6.e Frost Protection

Frost protection provides some protection for the boiler, and if configured/installed properly, the system as well.

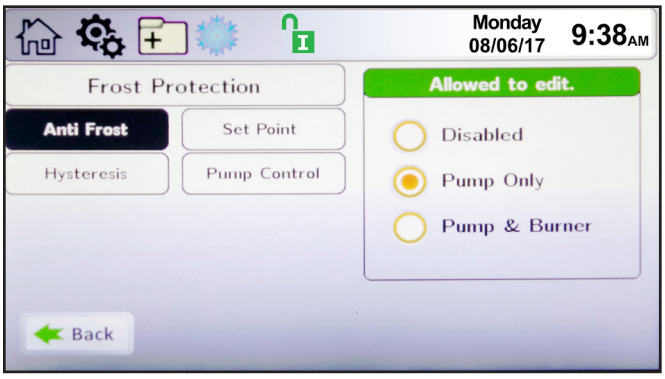

Screen 24. Anti-Frost Configuration Screen

The Anti-Frost Configuration Screen allows adjustment of the following parameters:

• **Anti-Frost –** Allows an operator to select one of the following three modes: Disabled, Pump Only, Pump and Burner.

• **Set Point –** The temperature at which the pool heater will apply the Hysteresis value to enable the Anti-Frost mode.

• **Hysteresis –** This parameter is a +/- offset of the Anti-Frost Set Point used to turn on/off the Anti-Frost mode. For example, if the Set Point is 44°F, and the Hysteresis is 4, the Anti-Frost action will initiate at 40°F (set point – hysteresis) and then will end at 48°F (set point + hysteresis).

• **Pump Control –** This parameter provides the ability to select which pump(s) to apply the Anti-Frost Mode to.

If Anti-Frost mode is active, a snow flake icon will appear above the pool heater's inlet temperature on the home screen. See Figure 19

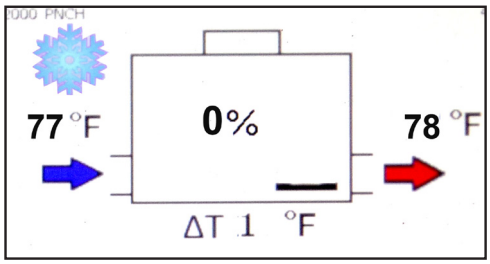

Figure 19. Active Anti Frost Condition

6.E.7 Login

To navigate to the Login Screen, touch the Login Icon on any of the menus. **See Section 6.B on page 30**

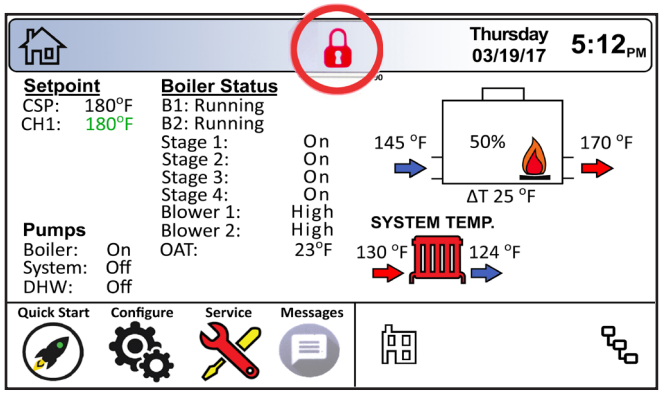

Screen 25. Touch the lock on any screen.

6.F Service Screens

To navigate to the Service Screen, touch the Service Icon in the lower left-hand portion of the Home Screen.

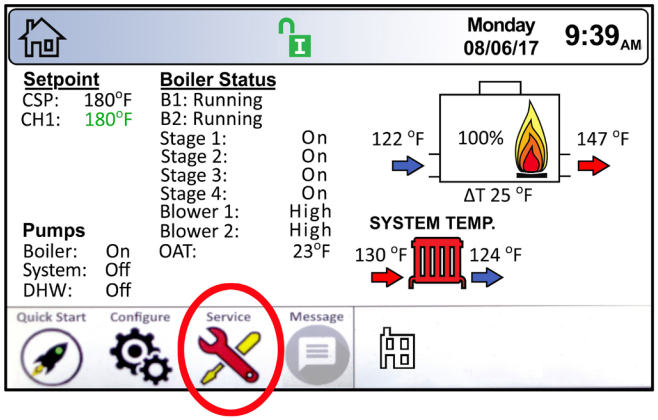

Screen 26. Home Screen

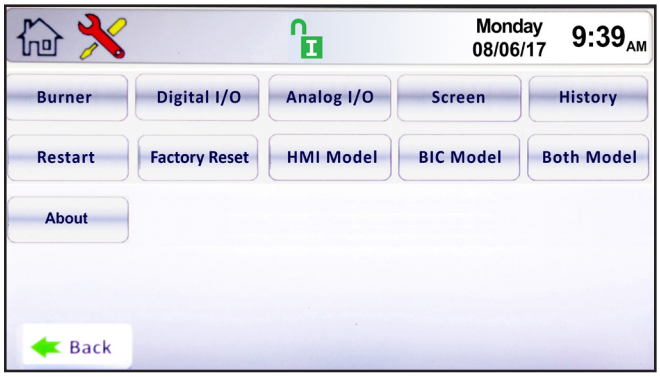

Screen 27. The Service Screen

NOTE: The Navigation Bar does not poplulate with new icons as you navigate into the various Service Screens.

From the Service Screen, basic diagnostic or service modes can be configured. The following sections give an overview of each service sub menu.

6.F.1 Burner

Navigate to the Burner Screen by touching the Burner Button on the Service Screen.

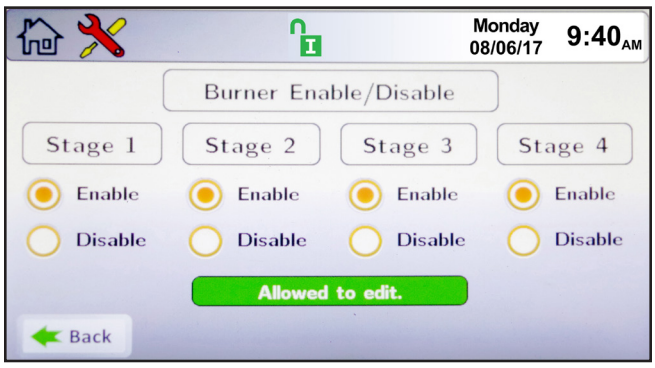

Screen 28. The Burner Screen

The Burner Screen allows each stage to be enabled or disabled for troubleshooting and/or diagnostic purposes. This screen will only display the number of stages associated with the size of the unit. For example, pool heater sizes 500/750 have two stages, size 1000 has three stages, and sizes 1250/1500/1750/2000 have four stages. Pool Heaters are On/Off units only.

NOTE: The hot surface ignitors (HSI) are associated with Stages 1 and 3. If Stage 1 is disabled, then Stage 2 will automatically be disabled. If Stage 3 is disabled, then Stage 4 will automatically be disabled.

6.F.2 Digital I/O (Input / Output)

Navigate to the Digital I/O Screen by touching the Digital I/O Button on the Service Screen.

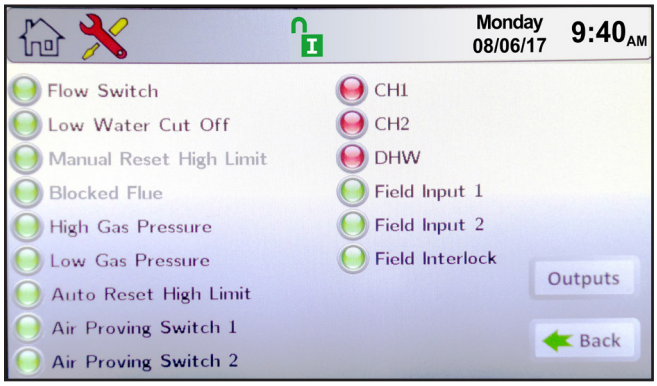

Screen 29. Digital I/O Screen - Inputs

There are two screens associated with the Digital I/O,
1. the Digital I/O Screen – Inputs, see above, and
2. Digital I/O Screen – Outputs, see below.

For digital (on/off) inputs, if the input is satisfied, the indicator light associated with that input is green. For example, if there is adequate flow, the flow switch is satisfied, and the flow switch digital input indicator light is green. Similarly, if the input is not satisfied, the indicator light associated with that input is red. For example, if the blower is off, then the air proving switch is not satisfied and the air proving switch digital input indicator light is red.

For digital (on/off) outputs, if the output is on, the indicator light associated with that output is green. For example, if the heater pump is running, then the heater pump output indicator light will be green. Similarly, if the output is off, the indicator light associated with that output is red. For example, if there is no call for heat, then the gas valves are off, and the gas valve indicator lights will be red.

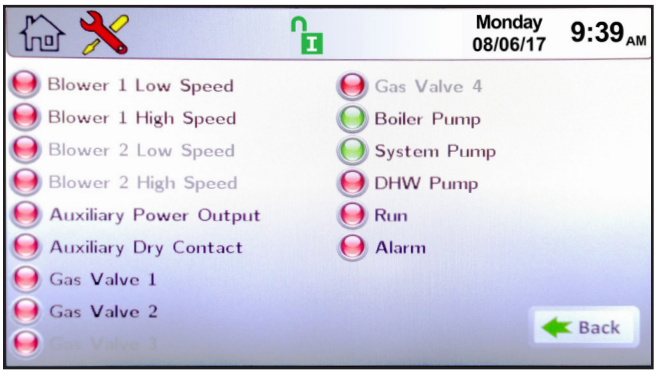

Screen 30. Digital I/O Screen - Outputs

6.F.3 Analog I/O

Navigate to the Analog I/O Screen by touching the Analog I/O Button on the Service Screen.

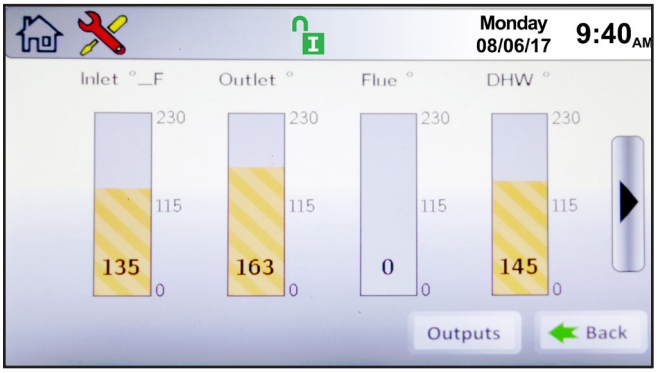

Screen 31. Analog I/O Screen - Inputs

NOTE: This pool heater does not use a flue stack sensor.

There are two screens associated with the Analog I/O, the Analog I/O Screen – Inputs, see above, and the Analog I/O Screen – Outputs, see below.

For analog inputs, there are three types of analog inputs: sensors, flame signal, and voltage/current (VDC/mA). Wiring of these inputs are covered in Section SECTION 5

NOTE: If the input is not attached, the value will be zero.

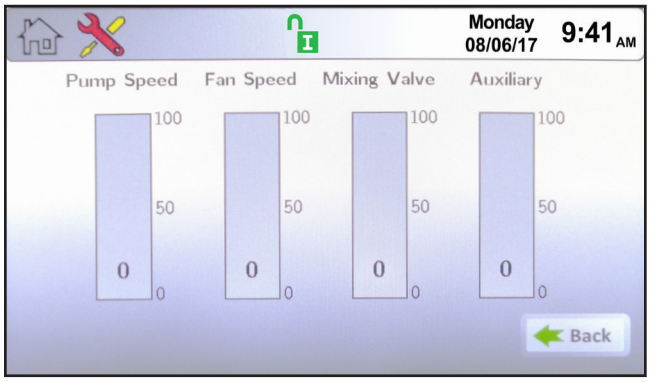

Screen 32. Analog I/O Screen - Outputs

6.F.4 Screen Settings

Navigate to the Screen Settings Screen by touching the Screen Button on the Service Screen.

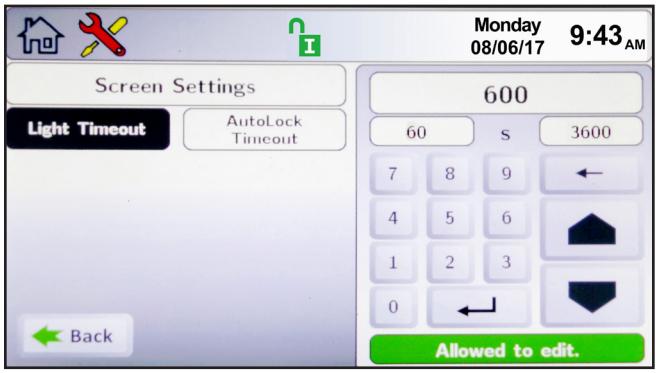

Screen 33. Screen Settings Screen

There are two adjustable screen settings: Light Timeout and AutoLock Timeout. Light Timeout allows the user to adjust the amount of time the touch screen backlight will remain lit after user interaction has ceased. AutoLock Timeout allows the user to adjust the amount of time the touch screen will remain unlocked with no user interaction.

6.F.5 History

Navigate to the History Screen by touching the History Button on the Service Screen.

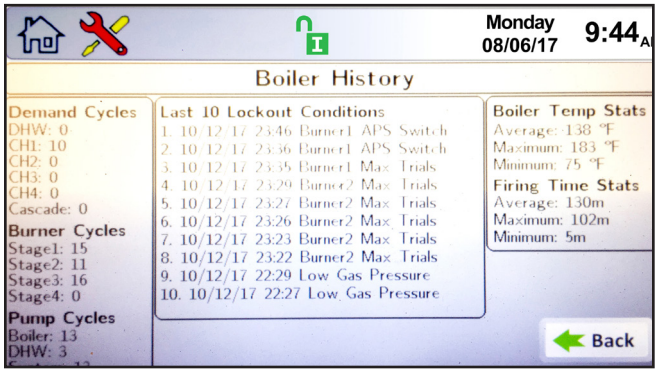

Screen 34. History Screen

The History Screen provides information on boiler operations and cycle counts. The pool heater's control accumulates and displays the number of heat demand cycles, burner cycles, and pump cycles. It displays the 10 most recent lock-out conditions, and temperature and firing statistics.

6.F.6 Restart

Touching the Restart Button on the Service Screen reboots the touchscreen display. If the touchscreen seems to be out of alignment, this is used to recalibrate the touchscreen.



Screen 35. Restart Screen

To recalibrate the touch screen. After pressing the Restart Button, promptly touch the touch screen and follow the calibration procedure as shown on the touch screen.

6.F.7 Factory Reset

Touching the Factory Reset Button on the Service Screen resets all touch screen adjustable parameters back to the factory default setting.

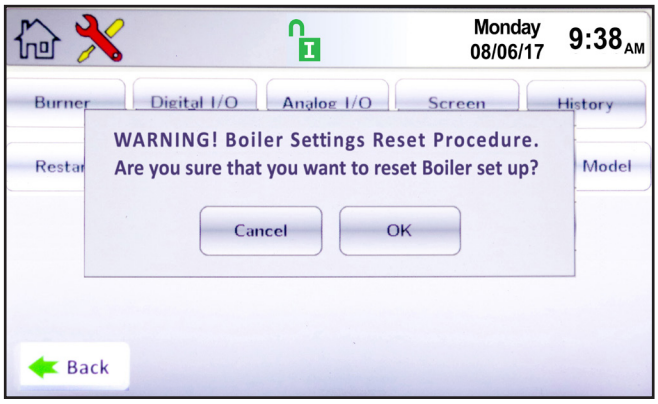

Screen 36. Factory Reset Screen

6.G Messages and USB

6.G.1 Messages

The 'Message' icon at the bottom of the home screen will display an 'Exclamation' when there is a message. Press the icon to see what the message is.

Messages are generally self explanatory and will guide a qualified service technician to the issue or parameter that needs to be adjusted and/or serviced.

A 'Message' will not be a 'Lock-Out' condition which is discussed in Section 10.A on page 53.

Additionally, this area of the home screen will indicate that a USB device has been inserted into the USB port which is located behind the touchscreen display. See Figure 20 on page 44.

6.G.1 Messages

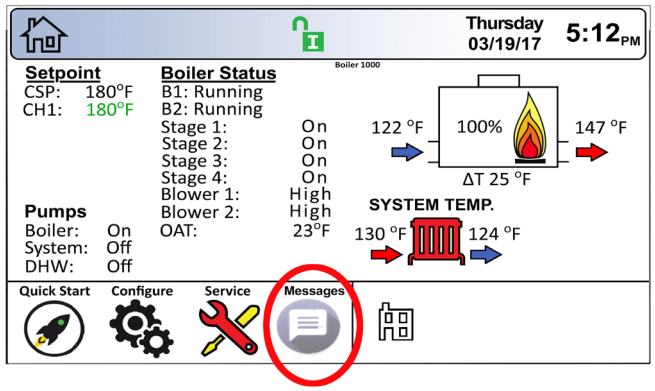

Screen 37. Home Screen, Typical

6.G.2 USB Functionality

The Display has a USB port that can be used to perform the following tasks:

a. Download parameters from a thumb drive to a boiler.
b. Upload parameters from a boiler to a thumb drive.
c. Upload data from the boiler to a thumb drive.

The USB port is integrated into the back of the touchscreen display. To access it, the front panel of the unit must be removed and then the touchscreen removed from it's mounted location. The USB port can then be seen on the back of the touchscreen display.

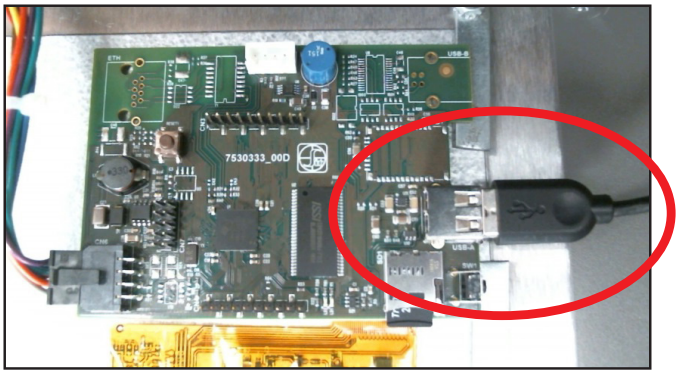

Figure 20. Photo of USB Slot on the back of touchscreen display.

Once a USB thumb drive has been inserted into the USB port, the USB icon will pop up on the home screen.

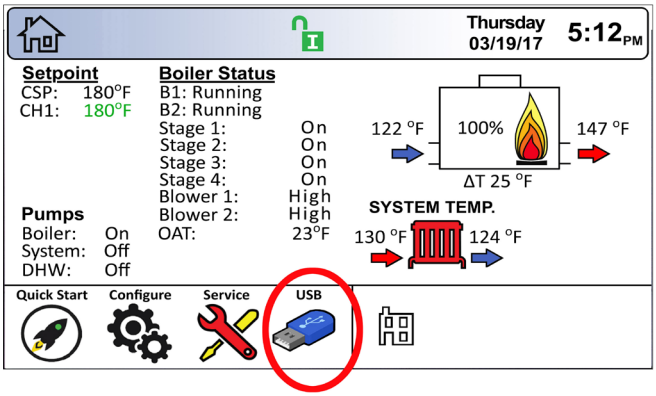

Screen 38. Home Screen showing USB

Once the USB icon has appeared over the Message icon, you can then select the USB icon and it will switch to the USB menu (See Screen 39). Here you can perform these 3 tasks.

Download Parameters from the boiler: This saves time during a cascade setup or a control replacement where the contractor only has to enter the values in 1 boiler instead of upwards of 8 boilers.

Upload Parameters from the boiler: This feature is to upload all parameters and settings into a thumb drive for documentation purposes or to be able to copy these settings from boiler to boiler without having to re-enter them individually.

Upload DATA from the boiler: This is used to retrieve runtime data, history, as well as capture all settings in a tab delimited Excel format document.

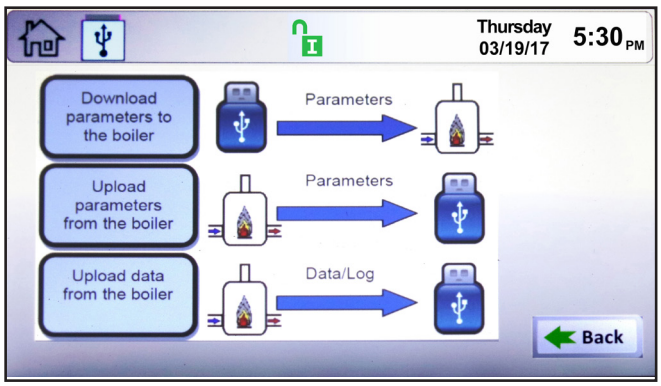

Screen 39. Data Tasks for the USB Port

6.H Active Demands

The Active Demand Window indicates the status of active heat demands.

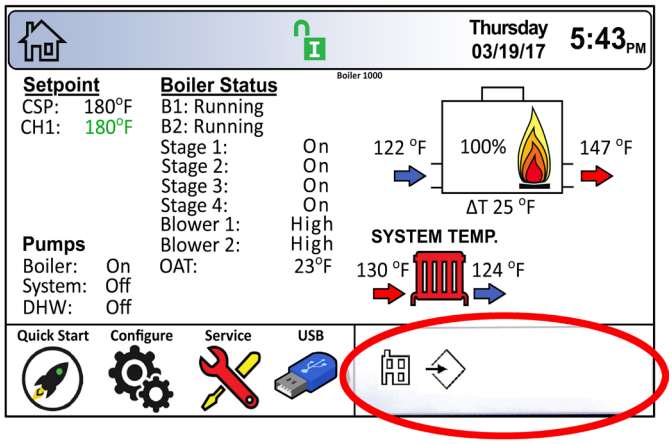

Screen 40. Active Demand Window

The **darker** Active Deman Icon indicates the heat demand that is currently being satisfied. A 'greyed out' Active Demand Icon is either lower in priority than the heat demand that is currently being satisfied, or the heat demand has reached set point, but remains active.

	CH1/2 or DHW1/2
	External

Figure 21. Active Demand Examples

6.I The Navigation Bar

The Navigation Bar is a touch sensitive area at the top left of every screen, that shows you where you are at any time as you navigate into and out of the touchscreens. The further in that you go, the more icons will appear in the Navigation Bar. If you are 4 icons in and want to go back to the Home Screen, simply click onto the Home Icon. If you click onto any icon in the Navigation Bar, you will go to that location directly. If you want to go back just one step, you can click onto the next Icon back, OR use the Back button.

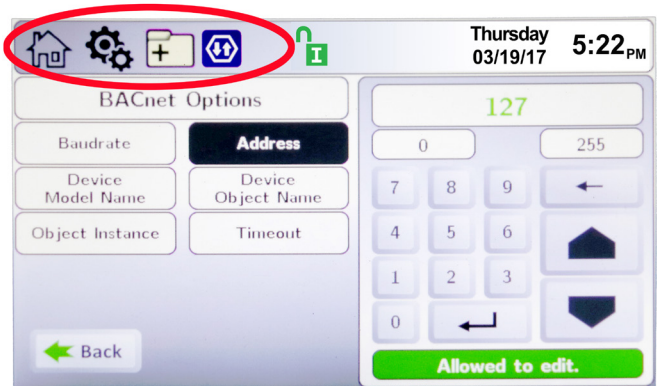

Screen 41. The Navigation Bar

Lock-out Conditions will also display inside the Navigation Bar. Refer to Table 13 on page 54 for a list of possible Lock-out conditions.

6.J Date and Time Display Area

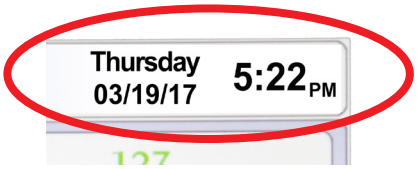

The top right portion of the Home Screen shows the Date and Time. To set the Date and Time, **please refer to Section 6.E.5 on page 38.**

SECTION 7 Sequence of Operation

7.A Sequence of Operation

Start Up and Shut Down of the Pool Heater must be performed by a qualified service person.

This appliance will follow the sequence of operations explained in this section and reflected in the flow chart on the next page.

NOTE: Models 1000 – 2000 have two ignition sources. The controller treats the burners associated with each ignitor as an independent boiler/heater. If one ignitor should fail for any reason, the remaining ignitor and burner(s) will operate independently.

Standby

Upon a call for heat, the pump is energized and once the adequate liquid flow is establish, the flow switch is satisfied. If all other safety interlocks are satisfied, the Pre-Purge cycle begins.

Pre-Purge

In Pre-Purge, the blower turns on high speed and confirms that the Air Proving Switch (APS) transitions from open to closed. The gas valves and Hot Surface Ignitor (HSI) are off. The duration of Pre-Purge is 15 seconds, and once expired, the pool heater transitions to HSI Warmup. If the APS remains open, or if there is a separate lock-out condition, the pool heater locks out and transitions to the Lock-out mode. If the call for heat is removed, the boiler/heater will transition back to the Standby mode.

NOTE: The duration of Pre-Purge is established to ensure proper evacuation of any unspent fuel in the combustion chamber and flue collector.

HSI Warmup

In HSI Warmup, the blower continues to run at high speed, the gas valves remain off, and power is applied to the HSI. The current flowing through the HSI must be between 3.1 – 6.0 Amps 20 seconds. If the HSI amperage meets the threshold and time requirements, the boiler/heater will transition to the Ignition mode. If the amperage doesn't meet the threshold and time requirements, or if there is a separate lock-out condition, the pool heater will transition to Lock-out mode. If the call for heat is removed, the pool heater will return to Standby.

Ignition

In Ignition, the blower continues to run at high speed, the HSI is on, and the gas valve associated with the HSI is energized. Proper ignition has occurred if the flame signal is greater than or equal to 1.1 uAmps in 4 seconds. If a proper flame has been established, the Pool Heater will transition to Run mode. If proper ignition does not occur, and the maximum attempts for ignition has not occurred, the boiler/heater will transition to Inter-Purge mode. If proper ignition does not occur, and the maximum attempts for ignition has been reached, the boiler/heater will transition to Lock-out mode. If the call for heat is removed, the boiler/heater will transition to Standby.

NOTE: Three attempts for ignition, prior to lock-out, is standard. CSD-1 units have a single attempt for ignition prior to lock-out.

Run

In Run, the blower continues to run at high speed, the HSI is off, and the gas valve associated with the HSI is energized. The stage 2 or stage 4 gas valve will stage on/off as required to satisfy a call for heat. If there is a loss of flame during Run mode, the Pool Heater will transition to Inter-Purge mode. If a lock-out condition occurs during Run mode, the Pool Heater will transition to Lock-out mode. If the call for heat is removed, the Pool Heater will transition to Post-Purge prior to returning to Standby

Inter-Purge

In Inter-purge, the blower continues to run at high speed, the HSI is off, and the gas valves are off. The Pool Heater will stay in Inter-Purge for 15 seconds. After 15 seconds, the Pool Heater will transition to HSI Pre-Heat. If a lock-out condition occurs during Inter-Purge, the Pool Heater will transition to Lock-out. If the call for heat is removed during Inter-Purge, the Pool Heater will transition to Post-Purge prior to returning to Standby.

Post-Purge

In Post-purge, the blower continues to run at high speed, the HSI is off, and the gas valves are off. The Pool Heater will stay in Post-purge for 30 seconds. After this time, the Pool Heater will return to Standby.

NOTE: The duration of Post-Purge is establish to ensure proper evacuation of any unspent fuel in the combustion chamber and flue collector.

Lock-out

In Lock-out, the blower continues to run at high speed, the HSI is off, and the gas valves are off. The Pool Heater blower will stay on for 30 seconds. The lock-out condition will remain until it has been manually reset. Once reset, the Pool Heater will transition to Standby mode.

7.B Shutting Down this Pool Heater

1. Switch off the main electrical disconnect switch.
2. Close all manual gas valves.
3. If freezing is anticipated, drain the pool heater and be sure to also protect building piping from freezing.

7.C Restarting this Pool Heater

Being sure that the pool and heating system have not been drained.

1. Switch off the main electrical disconnect switch.
2. Close all manual gas valves.
3. **WAIT FIVE (5) MINUTES.**
4. Set the aquastat or thermostat to its lowest setting.
5. Open all manual gas valves.
6. Reset all safety switches (pressure switch, manual reset high limit, etc.).
7. Set the temperature controller to the desired temperature setting and switch on electrical power.
8. Burner will go through a prepurge period and ignitor warm-up period, followed by ignition.

7.D Therapeutic Pools (Spas)

Therapeutic pools or "spa" pools are usually piped and controlled so that very warm or hot water, often with air injection, is forced at high velocity into a confined area of a swimming pool or into a small separate pool. For the purposes of this manual, any application in which the water temperature is maintained above 85°F (30°C) is considered a *spa.*

SPECIAL SET-UP AND OPERATING PROCEDURES APPLY TO SPAS.

1. Models PNCP1000 and larger should **not** be used for spas due to their higher temperature rises.
2. To ensure that the spa inlet does not exceed 104°F (40°C), the spa filter pump must circulate water at the minimum flow rates shown in Table 9.

NOTE: Maximum Spa Temperature Is Assumed To Be 100°F (38°C).

3. Spas are excellent for relaxation, body-conditioning and for arthritic and rheumatic problems, but can be hazardous.

⚠WARNING

The U. S. Consumer Product Safety Commission has warned that elevated temperatures in spas and hot tubs can be hazardous. Follow these "Safety Rules for Hot Tubs:"

- Spa or hot tub water temperatures should never exceed 104°F (40°C). A temperature of 100°F (38°C) is considered safe for a healthy adult. Special caution is suggested for young children.
- Drinking of alcoholic beverages before or during hot tub use can cause drowsiness, which could lead to unconsciousness and subsequently lead to drowning.
- Pregnant women beware! Soaking in water above 102°F (39°C) can cause fetal damage during the first three months of pregnancy (resulting in the birth of a brain-damaged or deformed child). Pregnant women should stick to the 100°F (38°C) maximum rule.
- Before entering the spa or hot tub, users should check the water temperature with an accurate thermometer; spa or hot tub thermostats may err in regulating water temperatures by as much as 4°F (2°C).
- Persons with a medical history of heart disease, circulatory problems, diabetes or blood pressure problems should obtain their physician's advice before using spas or hot tubs.
- Persons taking medications which induce drowsiness, such as tranquilizers, antihistamines or anticoagulants, should not use spas or hot tubs.

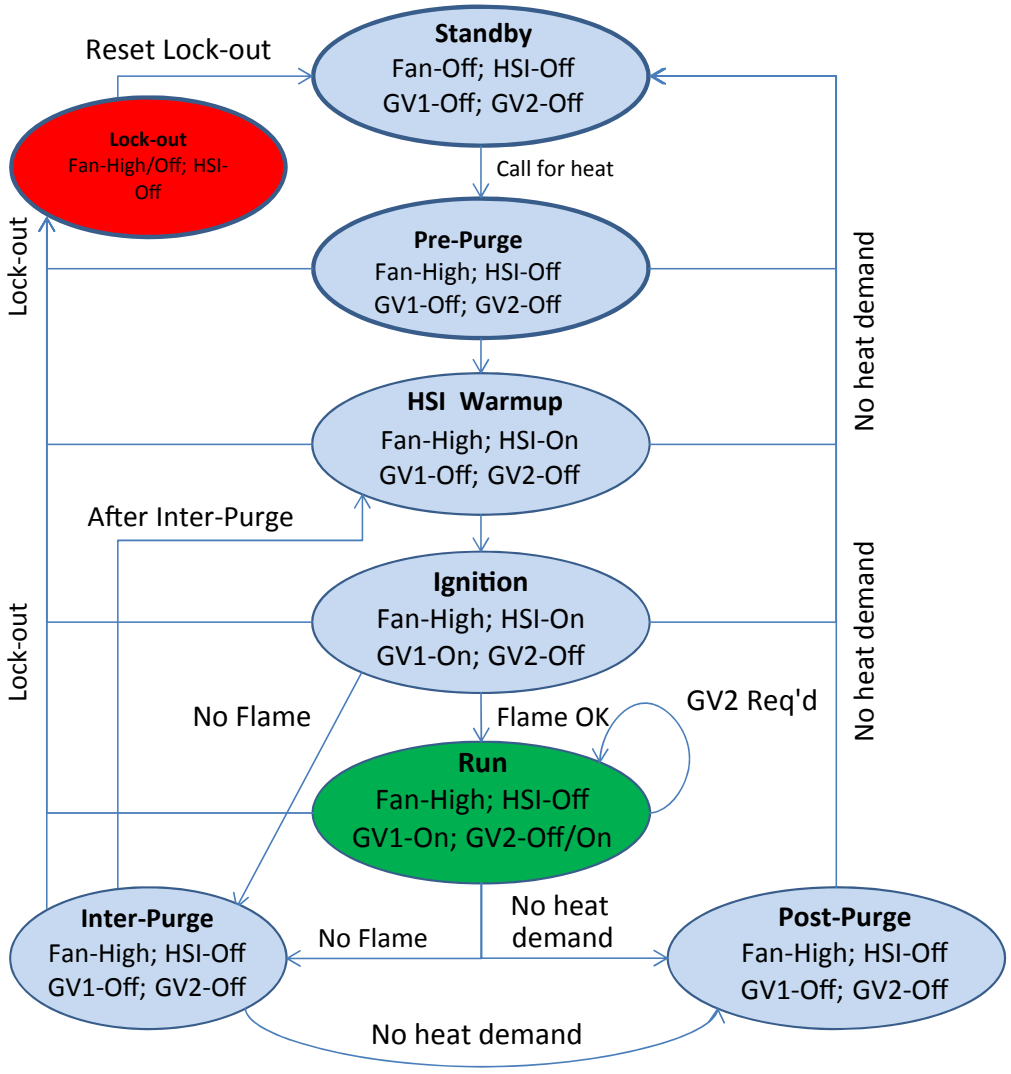

Figure 22. Timing and Ignition Flow

SECTION 8 Burner Set Up

8.A Set Up for 0 to 2500 Feet Altitude

This pool heater utilizes a modular design to achieve its stage-firing. The setup must be checked before the unit is put in operation. Problems such as failure to start, rough ignition, strong exhaust odors, etc. can be due to improper setup. Damage to the pool heater, resulting from improper setup is not covered by the limited warranty.

1. Using this manual, make sure the installation is complete and fully in compliance with the instructions.
2. Determine that the appliance and system are filled with water and all air has been bled from both. Open all valves.
3. Observe all warnings on the Operating Instructions label and turn on gas and electrical power to appliance.
4. Switch on the appliance power switch located on the right side of the unit.
5. The pool heater will enter the start sequence, as long as the unit is being called for heat. The blower and pump come on for pre-purge, then the ignitor warm-up sequence starts and after the ignitor warm-up is complete and all safety devices are verified, the gas valves open. If ignition doesn't occur, check that there

is proper gas supply. Wait 5 minutes and start the unit again. During initial start up, air in the gas line may cause the pool heater to "lock out" during the first few trials for ignition. Depending on the ignition modules installed, the manual reset button on the ignition modules may need to be depressed to restart the pool heater.

6. With the unit running, verify the supply gas pressure, manifold gas pressure, and CO2 according to the Table 12

		Natural Gas	Propane
Supply Gas Pressure	Typical	7" w.c. (1.7kPa)	11" w.c. (2.7kPa)
	Range	4" w.c. ≤ (supply pressure) ≤ 13" w.c.	
Manifold Gas Pressure		2.5" w.c. (0.62 kPa)	
CO_2		8%	9.2%

Table 12. Supply Gas Pressure

7. **After placing the appliance in operation, the Burner Safety Shutoff Device must be tested**.
   To test:
   (a) Close gas shutoff valve with burner operating.
   (b) The flame will go out and blower will continue to run for the post purge cycle. One additional attempt to light will follow. Ignition will not occur as the gas is off. The ignition control will lockout, and will have to be reset before the unit will operate.
   (c) Open gas shutoff valve. Restart the appliance. The ignition sequence will start again and the burner will start. The appliance will return to its previous mode of operation.

NOTE: Sizes 1000–2000 have two ignition controls and two ignitors, which work independently of one another. If the ignition control for stages 1 and 2 fails to properly light the main burners for those stages, the second ignition control will still be active, and will be able to energize stages 3 and 4. This, of course, will only occur if all other safety devices confirm that the unit will run in a safe condition.

8.B Set Up for High Altitude (>2500 Feet)

This pool heater may be operated at high altitude (7700 ft., 2347 m) with a reduction in output of approximately 10%. At altitudes of less than or more than 7700 ft. (2347 m) the appliance will perform equally as well, but with differing reductions in output. At elevations higher than 7700 ft. (2347 m) the reduction in output will exceed 10% and at elevations below 7700 ft. (2347 m) it will be less than 10%. High altitude adjustment must not be made on appliances operating at elevations below 2500 ft. (762 m).

No orifice changes are required to adjust the the pool heater for high altitude. High altitude adjustment is accomplished by adjustment of the gas valve manifold pressure and the air shutter(s). The required instruments used to assist in these adjust-ments are a CO_2 or O_2 Analyzer and a U-Tube Manometer or other device capable of reading a pressure of 2.5-3.0 inches w.c. (0.62-0.75 kPa).

Start the adjustment process by checking the CO_2 in the "as installed" condition. Adjust the air shutter(s) so that the CO_2 is about 8% or the O_2 is about 6.8% for appliances operating on Natural Gas. For appliances operating on LP Gas adjust the air shutter(s) so that the CO_2 is about 9.2% or the O_2 is about 6.8%. Appliances with two blowers should be adjusted so that the air shutters below each blower are open the same amount.

Once the CO_2 or O_2 has been set, the manifold pressure may be adjusted. Remove the 1/8 NPT plug from the lower side of the gas valve that is to be set and install a fitting, hose and manometer. Start the appliance and observe the manifold pressure. Manifold pressure must be adjusted to 3.0 in. w.c. (0.75 kPa) (for high altitude only, standard operating pressure is 2.5 in. w.c. (0.62 kPa)). It is adjusted by removing the slotted cap on the gas valve and turning the adjustment screw (beneath the cap) clockwise to increase pressure and replaced after the adjustments have been completed and the fitting, hose and manometer have been removed and the 1/8" plug has been replaced. Repeat this process until all gas valves have been set. **Note:** The pressure can be set only when the appliance is operating and only when the particular gas valve being adjusted is energized by a call for heat from the staging control.

After all of the gas valve manifold pressures have been set, the CO_2 or O_2 must be reset. CO_2 or O_2 will have changed when the manifold pressure was adjusted. Open the air shutter(s) to reduce the CO_2 or O_2 to the values achieved previously.

The procedure is complete when all gas valves are adjusted to a manifold pressure of 3.0 in. w.c. (0.75 kPa) and the CO_2 is adjusted to 8.0% for Natural Gas appliances or 9.2% for LP appliances. When using an O_2 analyzer, the correct O_2 is 6.8% for both Natural Gas and LP appliances.

⚠ Caution

Should any odor of gas be detected, or if the gas burner does not appear to be functioning in a normal manner, close main shutoff valve, do not shut off switch, and contact your heating contractor, gas company, or factory representative.

SECTION 9 Maintenance

9.A System Maintenance

1. Lubricate the system water-circulating pump, if required, per the instructions on the pump.
2. If a strainer is employed in a pressure reducing valve or the piping, clean it every six months.
3. Inspect the venting system for obstruction or leakage at least once a year. Periodically clean the screens in the vent terminal and combustion air terminal (when used).
4. Keep the appliance area clear and free from combustible materials, gasoline, and other flammable vapors and liquids.
5. If the appliance is not going to be used for extended periods in locations where freezing normally occurs, it should be isolated from the system and completely drained of all water. All systems connected to it should also be drained or protected from freezing.
6. Low water cutoffs, if installed, should be checked every 6 months. Float type low water cutoff should be flushed periodically.
7. Inspect flue passages, and clean with brushes/ vacuums, if necessary. Sooting in flue passages indicates improper combustion. Determine the cause and correct.
8. Inspect the vent system and air intake system, and if the vent system is Category III, ensure that all joints are sealed properly. If joints need to be resealed, completely remove existing sealing material, and clean with alcohol. Apply new sealing material, and re-assemble.

9.B Appliance Maintenance and Component Description

Only OEM replacement parts should be used.

⚠ Caution

Label all wires prior to disconnection when servicing controls. Wiring errors can cause improper and dangerous operation. Verify proper operation after servicing.

See Figure 23 and Figure 24 for location of gas train and control components.

The gas and electric controls on the appliance are engineered for long life and dependable operation, but the safety of the equipment depends on their proper functioning. It is strongly recommended that a qualified service technician inspect the basic items listed below every year:

a. Controller	d. Pressure switches
b. Ignitors	f. Blowers
c. Automatic gas valve	

9.B.1 Burners

Close main manual gas valve before proceeding. Checking the burners for debris - Remove the ignitor inspection panels(s) and ignitor(s) and inspect the burners through the ignitor hole(s) using a flashlight to illuminate. If there is any indication of debris on the burners that are visible, all the burners will need to be inspected more thoroughly. Remove the screws from around the front of the air box (large panel from which the ignitor inspection panel(s) were removed), and remove the large panel. Remove the gas manifold assemblies and the burner panels. Inspect the burners. Clean burners, if necessary, by blowing compressed air from the outside of the burners into the center of the burner. A dirty burner may be an indication of improper combustion or dirty combustion air. Determine the cause, and correct. Replace the burners in the reverse order

9.B.2 Filter

The filter used in this pool heater is washable with an 83% arrestance. Since the filter is washable, it will only need replacement when unwashable, deteriorated or damaged. If filter replacement is needed, it should only be replaced with a factory part. Inspect the air filter. If there is debris on the air filter, remove it from the filter box, and wash it with mild soap and water. Ensure that the filter is completely dry before re-installing, in reverse order.

9.B.3 Gas Valves

The gas valves are designed to operate with supply pressures of 4-13 inches w.c. (1.0 to 3.2 kPa).
To remove a valve, shut off 120-volt power and the manual gas shutoff valve. Remove the top front panel from the unit. Disconnect the wires to the valve. Disengage the flanged fitting before and after the valve, and remove the valve. Re-install in reverse order. Ensure o-rings are properly installed for both inlet and outlet. Turn on manual gas shutoff valve and 120 volt power and check appliance operation and tightness of gas valve connections.

9.B.4 Manual Reset High Limit Control

When used, the high limit switch is a manual reset switch with an adjustable set point, up to 240°F (116°C) on boiler models and 200°F (93°C) on water heater models and boilers ordered with low temperature controls. To replace the switch, shut off the 120-volt power to the appliance. Remove the cover from the switch to access the mounting screws. Remove the screws, and pull the switch off the control panel. Remove the capilliary and bulb from the thermal well located in the header. Replace in reverse order.

9.B.5 Automatic Reset High Limit Control

When used, an automatic reset high limit switch has an adjustable set point, up to 200°F (93°C) pool heater models.

To replace the switch, shut off the 120-volt power to the appliance. Remove the cover from the switch to access the mounting screws. Remove the screws, and pull the switch off the control panel. Remove the capillary and bulb from the thermal well located in the header. Replace in reverse order.

9.B.6 Controller

The controller is a proprietary BIC (boiler integrated control). The controller ensures the proved interrupted-type ignition system. It controls the hot surface ignitor(s) and prove that the flame signal is appropriate for powering the gas valves. It also controls the blower's pre-purge and post-purge.

To replace a controller, shut off the 120-volt power to the appliance. Remove the cover from the control panel. Remove the electrical connectors from the controller. Take out the controller's mounting screws, and pull the controller out. Replace in reverse order.

9.B.7 Ignitors

The ignitors used are 120v "Hot Surface" type.

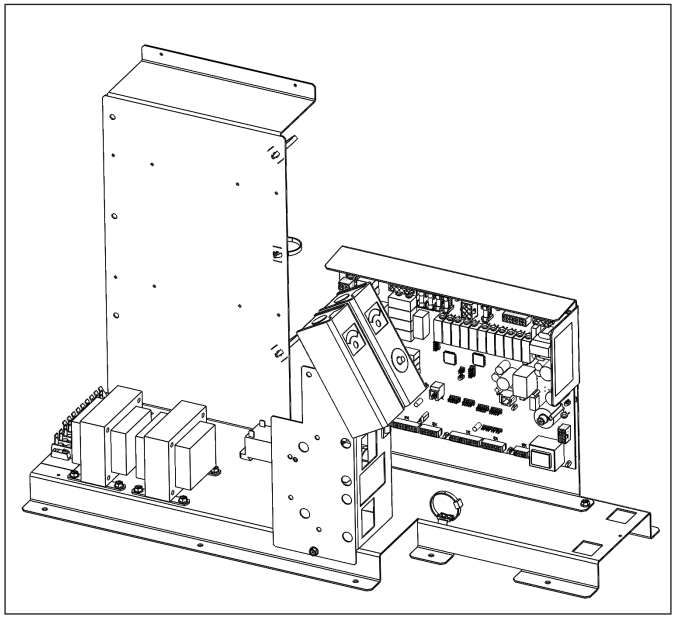

Figure 24. Typical Control Panel.

They are energized whenever there is a call for heat and switched off when ignition is established and the flame has been sensed. Sizes 500 and 750 have one ignitor. Sizes 1000 to 2000 have two ignitors. To replace the ignitor, shut off the 120-volt power to the appliance, remove the ignitor access panel, disconnect the Molex connector, remove the two mounting screws on the ignitor flange, and pull the ignitor out. Install in reverse order, always using a new ignitor gasket with the replacement ignitor.

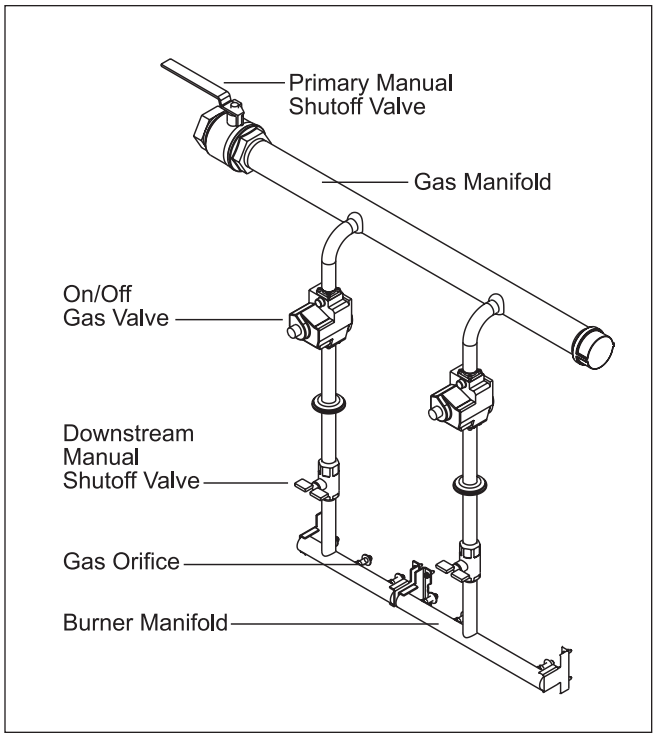

Figure 23. Typical Gas Train Configuration.

⚠ Caution

Ignitor gets hot.

9.B.8 Ignition Sensors

The ignition sensors ensure that the main flame is ignited, so that raw gas is not allowed to fill the combustion chamber. Sizes 500 and 750 have one sensor. Sizes 1000 to 2000 have two sensors (one for each ignition control). The ignitors for this pool heater are the ignition sensors. There are no separate ignition sensors.

9.B.9 Transformer

The transformer is not capable of supplying control voltage for external devices such as zone valves, which must have their own separate power supply. Should a transformer need replacing, shut off the 120-volt power. Unplug the transformer wires, remove the mounting screws and remove the transformer. Replace transformer in the reverse order.

9.B.10 Blowers

The combustion air blowers bring the combustion air for the appliance from the upper chamber to the lower chamber. Mixing of the gas and air occurs in the burners. Sizes 500, 750 and 1000 each have one blower, and sizes 1250 to 2000 each have two blowers (one blower for stages 1 and 2, and one for stages 3 and 4). If a blower change is required, turn off the 120-volt power and gas supply to the unit. Remove the front panel. Disconnect the blower's wire harness.

Remove the screws at the blower flange, and pull the blower out. Replace blower in reverse order, ensuring that all joints are made correctly. After replacement, ensure that the unit operates properly, by following the set-up procedure in this manual.

9.B.11 Flow Switch

This pool heater uses a paddle-type flow switch to ensure that the unit has water flow before ignition is allowed.

9.B.12 Heat Exchanger Coil

⚠ WARNING

Black carbon soot buildup on a dirty heat exchanger can be ignited by a random spark or flame, thereby creating a risk of fire or explosion.. To prevent this from happening, dampen the soot deposits with a wet brush or fine water spray before servicing the heat exchanger.

This pool heater has a pre-mixed burner system. These systems provide the burners with sufficient air for complete combustion, and black carbon sooting is seldom experienced. If sooting is suspected, view ports for inspection of the heat exchanger are provided on both sides of the boiler. They are located below the headers, and are accessed by opening the small round cover that is attached by one screw. In the unlikely event that there is a buildup of black carbon soot or other debris on the heat exchanger, clean per the following:

1. Disconnect the electrical supply to the unit.
2. Turn off the gas supply by closing the manual gas valve on the heater.
3. Disconnect and remove the wires, conduit and sensors from all components that are attached to the inlet/outlet header.
4. Isolate the heat exchanger from the water supply.
5. Disconnect header flanges from inlet and outlet.
6. Allow the heat exchanger to drain. Remove the front cover(s) by removing the rubber access strip(s) and the retaining screws. Remove the venting and remove the top, by removing the screws that attach the top to the side panels. Remove the side panels. Remove the front lower panels sealing the combustion area. To remove the gas train, disconnect the unions located below the intermediate pan and the field installed union located outside the cabinet, and pull up, bringing the union end connectors through the grommets in the intermediate pan. To remove the intermediate pan, remove the slide out control assembly and blower(s) to reveal the screws. Remove the screws holding the intermediate pan, and lift up to remove it. The heat exchanger has integral metal sections attached, which connect to the frame of the boiler. Locate and remove the screws along the front, rear and bottom of the integral metal sections, and remove the heat exchanger and metal sections by lifting up.On the larger appliances, a center heat exchanger support must be unbolted before it can be removed.
7. Remove the heat exchanger from the unit.

NOTE: The heat exchangers are heavy and may require two people to remove to avoid personal injury.

8. Clean the heat exchanger: A light accumulation of soot or corrosion on the outside of the heat exchanger can be easily removed. Use a wire brush to remove loose soot and scale from the heat exchanger. Do not use water or compressed air for cleaning.
9. While the heat exchanger is out of the unit, inspect the firewall refractory insulation. Replace if necessary.
10. Inspect the inside of the copper tubes for scale buildup. Scale can build up on the inner surface of the heat exchanger tubes, which can restrict water flow. If the tubes show signs of scaling, clean the internal surface.
11. Reassemble in the reverse order, and check appliance operation after start-up.

NOTE: The Warranty does not cover damage caused by lack of required maintenance, lack of water flow, or improper operating practices.

SECTION 10 Trouble Shooting

10.A Resolving Lockouts

There are many causes of lockouts. The three most common causes are: (1) inadequate gas supply, (2) poor combustion, (3) ignitor failure.

The Troubleshooting Errors & Lockouts list is shown on Table 10.E on page 54

1. **Inadequate gas supply:** Before proceeding, ensure that the gas supply has not been shutoff or the LP tank (LP boilers) is not empty.

If your boiler is equipped with the optional gas pressure switches, then the Low Pressure switch might have tripped and will need to be reset.

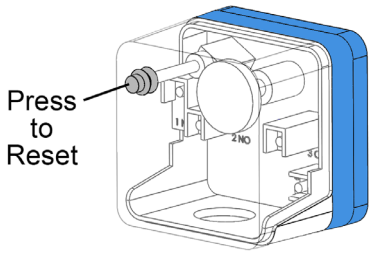

After resetting, restart the boiler and observe the operational cycle. After a 15-second fan pre-purge, the ignitor will heat up for 20 seconds, and then the unit will light. If it does not, check the gas supply pressure to the appliance, after resetting the appliance and attempting another start-up. The gas pressure to the appliance must be above 5" w.c. (1.2kPa) throughout the entire start-up cycle. If it is not, correct the supply problem (check gas valves or supply piping). If the supply pressure is adequate, consult the factory for assistance.

2. **Poor Combustion:** Poor combustion should be suspected if there is a strong flue gas odor. The odor may result from an improper gas/air ratio (high or low O_2 or CO_2). This appliances operate best with 45% excess air (8% CO_2 on natural gas, 9.2% CO_2 on LP). Check the CO_2 of the appliance and adjust if necessary.

3. **Ignitor failure:** If the boiler goes through a normal start cycle but combustion does not occur, ignitor failure should be suspected. Check the ignitor by unplugging the ignitor plug and measuring the ignitor resistance. It should be 50-80 ohms. If the resistance is not 50-80 ohms, replace the ignitor. If the resistance is correct, reset the boiler and check for 120 VAC at the ignitor plug during the start cycle. If there is no voltage, replace the faulty ignitor wire harness or the ignition control.

10.B Delayed Ignition — Possible Causes

A defective burner can cause a delayed ignition. If the gas supply pressure is proper and the gas valves are functioning properly, then burners should be inspected. There should be no distortion or perforations in the burners outside of the active burner port area. Replace if indicated.

10.C Short Cycling — Pool Heater

Short cycling will generally occur only in combination space heating and water heating applications when the water heater is operating in the space-heating mode. Because this product is a stage-fired water heater and its input will reduce when there is a reduction in heating load, short cycling is greatly reduced. If the heating load drops below the minimum input of the water heater for an extended period, the water heater will have a tendency to short cycle. If short cycling is frequently experienced, regardless of the control's attempt to limit it, the heating load should be redistributed to control it.

If short cycling occurs in a water heater application, it is probably caused by undersized piping between the water heater and the storage tank or by some other factor that restricts proper water flow through the water heater. The cause should be determined and corrected.

10.D High Gas Consumption

Appliances operating with an improper air/fuel ratio are very inefficient and consequently, have very high gas consumption. Because efficiency is high when the CO_2 is high (or O_2 is low), appliances operating with low CO_2or high O_2 (especially LP appliances) consume more gas. Adjust the CO_2 or O_2 for optimum efficiency. If no combustion analyzing equipment (CO_2 or O_2) is available then a proper adjustment of the air/fuel ratio (CO_2 or O_2) cannot be accomplished. However, by briefly sniffing the flue gases it is possible to determine if the CO_2 or O_2 is within the proper range. No significant flue gas odor should be detected when combustion is proper. A strong piercing smell indicates poor combustion and generally a lean mixture - low CO_2 or high O_2 . The CO_2 should be 8% at high fire. To check the CO_2, first verify that the supply gas pressure is within 5" to 13" w.c. (1.2 to 3.2 kPa) With the unit running and with all stages firing, set the air box pressure to 1.5" w.c. (0.37 kPa) (as a starting point), by adjusting the air shutter(s) at the bottom of the fan(s). Check the CO_2, and adjust the air shutters if further adjustment to the CO_2 is needed. Sizes 1250 to 2000 have two blowers and two air chambers (boxes). The pressure of each air box must be equal when the final adjustment is made.

10.E Troubleshooting Errors & Lockouts

<table>
<tr><th>Error</th><th>Description</th><th>Corrective Action</th></tr>
<tr><td>Flow Switch</td><td>Insufficient flow at the outlet of the boiler/heater.</td><td>• Faulty boiler/heater pump – replace pump.
• Faulty pump contactor – replace contactor.
• Blown boiler/heater pump fuse – replace fuse F14 on the control board.</td></tr>
<tr><td>Low Water Cut Off</td><td>Insufficient water level in the boiler/heater heat exchanger.</td><td>• Reset the LWCO from the reset button on the LWCO module.
• Verify the system is full of water and all air has been purged from the system.
• Check for loose jumpers if the LWCO is not installed.</td></tr>
<tr><td>Man Reset High Limit</td><td>Outlet water temperature has exceeded the manual reset high limit setting.</td><td>• Verify the system is full of water and all air has been purged from the system.
• Verify the boiler/heater is piped properly into the heating system.
• Check for proper pump operations.
• Check the manual reset high limit set point.</td></tr>
<tr><td>Auto Reset High Limit</td><td>Outlet water temperature has exceeded the auto reset high limit setting.</td><td>• Verify the system is full of water and all air has been purged from the system.
• Verify the boiler/heater is piped properly into the heating system.
• Check for proper pump operations.
• Check the manual reset high limit set point.</td></tr>
<tr><td>Pressure Switch</td><td>Blocked flue switch contacts are open.</td><td>• Check the wiring connections to the switch. The wires should be connected to the common and normally open terminals.
• Check reference hose and tubing connected to the pressure switch for blockage/obstruction.
• Faulty switch – replace switch.
• Verify blower is operating – replace if necessary.
• Blown blower fuse – replace fuse F12 on the control board for blower1 or fuse F13 for blower2.</td></tr>
<tr><td>High Gas Pressure</td><td>The high gas pressure switch has tripped.</td><td>• Refer to Section 3 for Gas Supply and Piping information.
• Verify supply and manifold gas pressures satisfy requirements in Section 8 – correct if necessary.</td></tr>
<tr><td>Low Gas Pressure</td><td>The low gas pressure switch has tripped.</td><td>• Refer to Section 3 for Gas Supply and Piping information.
• Verify supply and manifold gas pressures satisfy requirements in Section 8 – correct if necessary.</td></tr>
<tr><td>Field Interlock</td><td>Field interlock is open.</td><td>• Check for loose or misplaced jumper if no field interlock device is installed.</td></tr>
<tr><td>Outlet Sensor</td><td>Outlet probe is not connected.</td><td>• Check the sensor and wiring. Repair or replace as needed.
• The outlet probe is a dual element probe with 10K and 20K thermistors. A quick test is to measure resistance and verify one resistance is double the other. Replace if necessary.
• Measure the resistance of each element of the sensor and compare to the resistance table below. Replace if necessary.
<table>
<tr><th></th><th>10K</th><th>20K</th></tr>
<tr><th>Temp (°F)</th><th>Resistance (Ω)</th><th>Resistance (Ω)</th></tr>
<tr><td>68</td><td>12555</td><td>25099</td></tr>
<tr><td>86</td><td>8025</td><td>16057</td></tr>
<tr><td>104</td><td>5279</td><td>10569</td></tr>
<tr><td>122</td><td>3563</td><td>7139</td></tr>
<tr><td>140</td><td>2463</td><td>4937</td></tr>
<tr><td>158</td><td>1739</td><td>3489</td></tr>
<tr><td>176</td><td>1253</td><td>2514</td></tr>
<tr><td>194</td><td>919</td><td>1845</td></tr>
<tr><td>212</td><td>685</td><td>1376</td></tr>
</table></td></tr>
<tr><td>Outlet Sensor Drift</td><td>Dual element sensor readings do not agree.</td><td>• Check the sensor and wiring. Repair or replace as needed.
• The outlet probe is a dual element probe with 10K and 20K thermistors. A quick test is to measure resistance and verify one resistance is double the other. Replace if necessary.
• Measure the resistance of each element of the sensor and compare to the resistance table below. Replace if necessary.
<table>
<tr><th></th><th>10K</th><th>20K</th></tr>
<tr><th>Temp (°F)</th><th>Resistance (Ω)</th><th>Resistance (Ω)</th></tr>
<tr><td>68</td><td>12555</td><td>25099</td></tr>
<tr><td>86</td><td>8025</td><td>16057</td></tr>
<tr><td>104</td><td>5279</td><td>10569</td></tr>
<tr><td>122</td><td>3563</td><td>7139</td></tr>
<tr><td>140</td><td>2463</td><td>4937</td></tr>
<tr><td>158</td><td>1739</td><td>3489</td></tr>
<tr><td>176</td><td>1253</td><td>2514</td></tr>
<tr><td>194</td><td>919</td><td>1845</td></tr>
<tr><td>212</td><td>685</td><td>1376</td></tr>
</table></td></tr>
<tr><td>Inlet Sensor</td><td>Inlet sensor is damaged or not connected.</td><td>• Check the sensor and wiring. Repair or replace as needed.
• Measure the resistance of the sensor and compare to the resistance table below. Replace if necessary.
<table>
<tr><th>Temp (°F)</th><th>Temp (°C)</th><th>Resistance (Ω)</th></tr>
<tr><td>68</td><td>20</td><td>12555</td></tr>
<tr><td>86</td><td>30</td><td>8025</td></tr>
<tr><td>104</td><td>40</td><td>5279</td></tr>
<tr><td>122</td><td>50</td><td>3563</td></tr>
<tr><td>140</td><td>60</td><td>2463</td></tr>
<tr><td>158</td><td>70</td><td>1739</td></tr>
<tr><td>176</td><td>80</td><td>1253</td></tr>
<tr><td>194</td><td>90</td><td>919</td></tr>
<tr><td>212</td><td>100</td><td>685</td></tr>
</table></td></tr>
</table>

Table 13. Troubleshooting Error Codes.

Error Codes (continued)

Error	Description	Corrective Action
Burner1 APS Switch	Burner1 air proving switch contacts are open.	• Check the wiring connections to the switch. The wires should be connected to the common and normally open terminals. • Check reference hose and tubing connected to the pressure switch for blockage/obstruction. • Faulty switch – replace switch. • Verify blower is operating – replace if necessary. • Blown blower fuse – replace fuse F12 on the control board for blower1.
Burner2 APS Switch	Burner2 air proving switch contacts are open. **NOTE:** 1.25MM – 2.0MM Only	• Check the wiring connections to the switch. The wires should be connected to the common and normally open terminals. • Check reference hose and tubing connected to the pressure switch for blockage/obstruction. • Faulty switch – replace switch. • Verify blower is operating – replace if necessary. • Blown blower fuse – replace fuse F13 on the control board for blower2.
Burner1 Parasitic Flame	Sensing flame on burner1 prior to ignition.	• Inspect HSI and wiring for damage and continuity. Replace if necessary. • Check HSI by unplugging the ignitor, remove from the system, and measure resistance. It should be between 50Ω - 80Ω, if it is not in this range, replace the HSI.
Burner2 Parasitic Flame	Sensing flame on burner2 prior to ignition. **NOTE:** 1.0MM – 2.0MM Only	• Inspect HSI and wiring for damage and continuity. Replace if necessary. • Check HSI by unplugging the ignitor, remove from the system, and measure resistance. It should be between 50Ω - 80Ω, if it is not in this range, replace the HSI.
Burner1 Max Trials	The maximum attempts for ignition has occurred, without sensing flame.	• Verify supply and manifold gas pressures satisfy requirements in Section 8 – correct if necessary. • Verify the proper intake and venting. • Inspect the burner. • During ignition, see Section 7, verify 24VAC at gas valve associated with the HSI.
Burner2 Max Trials	The maximum attempts for ignition has occurred, without sensing flame. **NOTE:** 1.0MM – 2.0MM Only	• Verify supply and manifold gas pressures satisfy requirements in Section 8 – correct if necessary. • Verify the proper intake and venting. • Inspect the burner. • During ignition, see Section 7, verify 24VAC at gas valve associated with the HSI.
Burner1 Max Flame Lost	The maximum allowable occurrences of the unit running and losing flame signal have occurred.	• Inspect HSI and wiring for damage and continuity. Replace if necessary. • Check HSI by unplugging the ignitor, remove from the system, and measure resistance. It should be between 50Ω - 80Ω, if it is not in this range, replace the HSI. • Verify supply and manifold gas pressures satisfy requirements in Section 8 – correct if necessary. • Verify the proper intake and venting. • Check combustion. • Inspect the burner. • Inspect the heat exchanger.
Burner2 Max Flame Lost	The maximum allowable occurrences of the unit running and losing flame signal have occurred. **NOTE:** 1.0MM – 2.0MM Only	• Inspect HSI and wiring for damage and continuity. Replace if necessary. • Check HSI by unplugging the ignitor, remove from the system, and measure resistance. It should be between 50Ω - 80Ω, if it is not in this range, replace the HSI. • Verify supply and manifold gas pressures satisfy requirements in Section 8 – correct if necessary. • Verify the proper intake and venting. • Check combustion. • Inspect the burner. • Inspect the heat exchanger.
Burner1 Proven HSI	Burner1 proven HSI failed	• Inspect HSI and wiring for damage and continuity. Replace if necessary. • Check HSI by unplugging the ignitor, remove from the system, and measure resistance. It should be between 50Ω - 80Ω, if it is not in this range, replace the HSI. • During the HSI Warmup stage of ignition, see Section 7, verify 120VAC at the HSI. • Blown HSI fuse – replace fuse F10 on the control board for HSI1.
Burner2 Proven HSI	Burner2 proven HSI failed **NOTE:** 1.0MM – 2.0MM Only	• Inspect HSI and wiring for damage and continuity. Replace if necessary. • Check HSI by unplugging the ignitor, remove from the system, and measure resistance. It should be between 50Ω - 80Ω, if it is not in this range, replace the HSI. • During the HSI Warmup stage of ignition, see Section 7, verify 120VAC at the HSI. • Blown HSI fuse – replace fuse F11 on the control board for HSI2.

10.F Parameter Tables

10.F.1 Pool Heater

	User	Installer	Minimum	Maximum	Default
Time & Date					
Hour	x	x	NA	NA	NA
Minute	x	x	NA	NA	NA
Month	x	x	NA	NA	NA
Day	x	x	NA	NA	NA
Year	x	x	NA	NA	NA
CH1					
CH1 Enable/Disable	x	x	Disable	Enable	Enable
CH1 Setpoint	x	x	60 F	104 F	90 F
CH1 Priority		x	1	97	60
Outdoor Reset (NOT Available on Pool Heaters)					
Cascade CH (NOT Available on Pool Heaters)					
Cascade DHW(NOT Available on Pool Heaters)					
Cascade Redundancy (NOT Available on Pool Heaters)					
Hybrid (NOT Available on Pool Heaters)					
Pump Configuration					
Boiler Pump Control		x	Auto	Auto/ Always On/ Off During DHW	Auto
Boiler Pump Post Circulation		x	0 secs	600 secs	60 secs
DHW Pump Control		x	DIsable	Auto/ Always On	Auto
DHW Pump Post Circulation		x	0 secs	600 secs	60 secs
System Pump Control		x	DIsable	Auto/ Always On/ Off During DHW	Auto
System Pump Post Circulation		x	0 secs	600 secs	60 secs
Variprime (NOT Available on Pool Heaters)					
Temperature Limits					
System Supply Auto Reset		x	40 F	135 F	135 F
Auto Reset Boiler Outlet Limit		x	100 F	200 F	180 F
Manual Reset Boiler Outlet Limit		x	100 F	200 F	190 F
Reset Differential		x	1 F	10 F	5 F
External Control					
Control Mode		x	Disable	Extenal Setpoint/ Firing Rate	Disable
External Control Priority		x	1	97	20
Maximum Setpoint		x	60 F	104 F	90 F
Minimum Setpoint		x	60 F	104 F	60 F
Maximum Firing Rate		x	0	10000	10000
Minimum Firing Rate		x	0	10000	0
Demand Max		x	0%	100%	100%
Demand Min		x	0%	100%	20%
Demand On		x	0%	25%	15%
Demand Off		x	0%	25%	10%
Anti- Frost					
Anti Frost Mode		x	Disable	Pump Only/ Pump & Burner	Pump Only
Anti- Frost Setpoint		x	32 F	104 F	40 F
Anti- Frost Hysteresis		x	3 F	10 F	5 F
Anti- Frost Pump Control		x	NA	Boiler/ DHW/ System	Boiler
Warm Weather Shutdown (NOT Available on Pool Heaters)					

Pool Heater continued	User	Installer	Minimum	Maximum	Default
Anti- Short Cycle Time					
Cycle Time		x	10 secs	240 secs	60 secs
Temperature Conversion					
Conversion Unit	x	x	Celsius	Fahrenheit	Fahrenheit
BACnet					
Baudrate		x	9600	76800	76800
Address		x	0	255	127
Device Model Name		x	NA	NA	NA
Device Object Name		x	NA	NA	NA
Object Instance		x	0	4194303	600000
Timeout		x	0 secs	300 secs	300 secs
Mixing Valve Anti- Condensing					
Mixing Valve Anti-Condensing Enable/Disable		x	Disable	Enable	Enable
Mixing Valve Anti-Condensing Temperature Setpoint		x	120 F	180 F	120 F
Mixing Valve Anti-Condensing Proportional Gain		x	0	32767	250
Mixing Valve Anti-Condensing Integral TIme		x	0	32767	15
Mixing Valve Anti-Condensing Derivative Time		x	0	32767	0
Condensing Alarm Setpoint		x	100 F	120 F	110 F
Minimum Voltage Output		x	0 mV	4000 mV	3500 mV
Maximum Voltage Output		x	4000 mV	10000 mV	6500 mV
Condensing Alarm Delay		x	0 mins	20 mins	10 mins
Condensing Shutdown Delay		x	0 mins	40 mins	20 mins
Service					
Stage 1 Burner Enable/Disable		x	Disable	Enable	Enable
Stage 2 Burner Enable/Disable		x	Disable	Enable	Enable
Stage 3 Burner Enable/Disable (Applicable to 1MM-2MM only)		x	Disable	Enable	Enable
Stage 4 Burner Enable/Disable (Applicable to 1.25MM-2MM only)		x	Disable	Enable	Enable
Screen Settings					
Light Timeout	x	x	0 secs	3600 secs	600 secs
AutoLock Timeout	x	x	0 secs	3600 secs	600 secs

10.F.2 Modbus Memory Map

MODBUS Address	Type	Bit	Read/Write	Value
0	S16		Read Only	Inlet Temp
1	S16		Read Only	Outlet Temp
2	S16		Read Only	Not used
3	S16		Read Only	DHW Temp
4	S16		Read Only	System Inlet Temp
5	S16		Read Only	System Outlet Temp
6	S16		Read Only	Outdoor Temp
7	S16		Read Only	Aux1 Temp
8	S16		Read Only	Aux2 Temp
9	S16		Read Only	Aux3 Temp
10	S16		Read Only	Aux4 Temp
11	S16		Read Only	Aux5 Temp
12	S16		Read Only	Flame Signal 1
13	S16		Read Only	Flame Signal 2
14	S16		Read Only	Analog Input 1
15	S16		Read Only	Analog Input 2
16	S16		Read Only	Analog Input 3
17	S16		Read Only	Analog Input 4
18	BitField	b0	Read Only	Flow Switch
		b1	Read Only	Low Water Cut Off
		b2	Read Only	Man Reset High Limit
		b3	Read Only	Pressure Switch
		b4	Read Only	High Gas Pressure Switch
		b5	Read Only	Low Gas Pressure Switch
		b6	Read Only	Field Interlock Swicth
		b7	Read Only	Spare Safety Chain Swicth
		b8…b15	Read Only	Not used
19	BitField	b0	Read Only	Damper Interlock Swicth
		b1	Read Only	Spare1 Swicth
		b2…b15	Read Only	Not used
20	S16		Read Only	Current Demand Source 0 -> No Demand 1 -> Anti Short Cycle 2 -> Service 3 -> DHW 4 -> Slave Cascade 5 -> External 6 -> CH1 7 -> CH2 8 -> CH3 9 -> CH4 10 -> Antifrost
21	BitField	b0	Read Only	Boiler Run Contact
		b1	Read Only	Alaram Contact
		b2	Read Only	DHW Pump
		b3	Read Only	System Pump
		b4	Read Only	Louver Contact
		b5	Read Only	Spare1 Contact
		b6	Read Only	Spare2 Contact
		b7	Read Only	Boiler Pump
		b8	Read Only	Spare Output
		b9…b15	Read Only	Not used
22	BitField	b0	Read Only	Not used
		b1	Read Only	Valve 1 Stage 1
		b2	Read Only	Valve 2 Stage 1
		b3	Read Only	Not used
		b4	Read Only	Valve 1 Stage 2
		b5	Read Only	Valve 2 Stage 2
		b6..b15	Read Only	Not used
23	S16		Read Only	Analog Output 1
24	S16		Read Only	Analog Output 2
25	S16		Read Only	Analog Output 3
26	S16		Read Only	Analog Output 4
27	S16		Read Only	Not used
28	S16		Read Only	Not used
29	S16		Read Only	Blower 1 Speed 0 -> Off 1 -> Low 2 -> High
30	S16		Read Only	Blower 2 Speed 0 -> Off 1 -> Low 2 -> High
31	S16		Read Only	HSI1 Current
32	S16		Read Only	HSI2 Current
33	S16		Read Only	Burner 1 Power Rating
34	S16		Read Only	Burner 2 Power Rating
35	S16		Read Only	Lockout Code
36	S16		Read Only	Blocking Code
37	S16		Read Only	Not used
38	U16		Read Only	DHW Call For Heat / 10
39	U16		Read Only	CH1 Call For Heat / 10
40	U16		Read Only	CH2 Call For Heat / 10
41	U16		Read Only	Not used
42	U16		Read Only	Not used
43	U16		Read Only	Cascade Call For Heat / 10
44	U16		Read Only	Valve 1 Stage1 Cycles / 10
45	U16		Read Only	Valve 2 Stage1 Cycles / 10
46	U16		Read Only	Valve 1 Stage2 Cycles / 10
47	U16		Read Only	Valve 2 Stage2 Cycles / 10
48	U16		Read Only	Boiler Pump Cycles / 10
49	U16		Read Only	DHW Pump Cycles / 10
50	U16		Read Only	System Pump Cyclces / 10
51	S16		Read Only	Average Outlet Temp
52	S16		Read Only	Max Outlet Temp
53	S16		Read Only	Min Outlet Temp
54	U16		Read Only	Average Firing Time
55	U16		Read Only	Max Firing Time
56	U16		Read Only	Min Firing Time
57	U16		Read Only	Not used
58	U16		Read Only	Not used
59	U16		Read Only	Not used
60	U16		Read Only	Not used
61	U16		Read Only	Not used
62	U16		Read Only	Not used
63	S16		Read Only	Not used
64	S16		Read Only	Modulation Sensor 0 -> None 1-> Outlet 2 -> DHW 3 -> System 4 -> Inlet 5 -> Flue 6 -> Sys return
65	U16		Read Only	Activate Service
66	U16		Read Only	Slave 1 State 0 -> Not Present 1 -> Not Available 2-> Available 3 -> Running 4 -> Locked Out
67	U16		Read Only	Slave 1 Firing Rate
68	U16		Read Only	Slave 2 State 0 -> Not Present 1 -> Not Available 2-> Available 3 -> Running 4 -> Locked Out
69	U16		Read Only	Slave 2 Firing Rate
70	U16		Read Only	Slave 3 State 0 -> Not Present 1 -> Not Available 2-> Available 3 -> Running 4 -> Locked Out
71	U16		Read Only	Slave 3 Firing Rate

MODBUS Address	Type	Bit	Read/Write	Value
72	U16		Read Only	Slave 4 State 0 -> Not Present 1 -> Not Available 2-> Available 3 -> Running 4 -> Locked Out
73	U16		Read Only	Slave 4 Firing Rate
74	U16		Read Only	Slave 5 State 0 -> Not Present 1 -> Not Available 2-> Available 3 -> Running 4 -> Locked Out
75	U16		Read Only	Slave 5 Firing Rate
76	U16		Read Only	Slave 6 State 0 -> Not Present 1 -> Not Available 2-> Available 3 -> Running 4 -> Locked Out
77	U16		Read Only	Slave 6 Firing Rate
78	U16		Read Only	Slave 7 State 0 -> Not Present 1 -> Not Available 2-> Available 3 -> Running 4 -> Locked Out
79	U16		Read Only	Slave 7 Firing Rate
80	U16		Read Only	Master State 0 -> Not Present 1 -> Not Available 2-> Available 3 -> Running 4 -> Locked Out
81	U16		Read Only	Master Firing Rate
82	S16		Read Only	Not used
83	U16		Read Only	Active CH Setpoint
84	U16		Read Only	Burner 1 Status
85	U16		Read Only	Burner 2 Status
86	U16		Read Only	Not used
87	U16		Read Only	Not used
88	U16		Read Only	Not used
89	U16		Read Only	Boiler Pump Status
90	U16		Read Only	Master Demand
91	U16		Read Only	Burner 1 Run Time
92	S16		Read Only	Burner 2 Run Time
…	S16		Read Only	Not used
127	S16		Read Only	Not used
128	S16		Read/Write	CH1 Enable/Disable
129	S16		Read/Write	CH1 Setpoint
130	S16		Read/Write	CH1 P
131	S16		Read/Write	CH1 I
132	S16		Read/Write	CH1 D
133	S16		Read/Write	CH2 Enable/Disable
134	S16		Read/Write	CH2 Setpoint
135	S16		Read/Write	CH2 P
136	S16		Read/Write	CH2 I
137	S16		Read/Write	CH2 D
138	S16		Read/Write	Not used
139	S16		Read/Write	Not used
140	S16		Read/Write	Not used
141	S16		Read/Write	Not used
142	S16		Read/Write	Not used
143	S16		Read/Write	Not used
144	S16		Read/Write	Not used
145	S16		Read/Write	Not used
146	S16		Read/Write	Not used
147	S16		Read/Write	Not used
148	S16		Read/Write	DHW Enable/Disable
149	S16		Read/Write	DHW Setpoint

MODBUS Address	Type	Bit	Read/Write	Value
150	S16		Read/Write	DHW P
151	S16		Read/Write	DHW I
152	S16		Read/Write	DHW D
153	S16		Read/Write	Not used
154	S16		Read/Write	Not used
155	S16		Read/Write	Cascade Setpoint
156	S16		Read/Write	Cascade P
157	S16		Read/Write	Cascade I
158	S16		Read/Write	Cascade D
159	S16		Read/Write	Not used
160	S16		Read/Write	Not used
161	S16		Read/Write	Not used
162	S16		Read/Write	Not used
163	S16		Read/Write	Hybrid Setpoint
164	S16		Read/Write	Hybrid Differential Temp
165	S16		Read/Write	Not used
166	S16		Read/Write	Not used
167	S16		Read/Write	Not used
168	S16		Read/Write	Not used
169	U16		Read/Write	AntiCondens Enable
170	S16		Read/Write	AntiCondens Temp
171	S16		Read/Write	AntiCondens P
172	S16		Read/Write	AntiCondens I
173	S16		Read/Write	AntiCondens D
174	S16		Read/Write	DHW demand
175	S16		Read/Write	CH1 demand
176	S16		Read/Write	CH2 demand
177	S16		Read/Write	Not used
178	S16		Read/Write	Not used
179	S16		Read/Write	Parameters enable

10.F.3 BACnet MSTP Memory Map

BacNet Address	BacNet Type	Bit	Value	Unit
0	AI		Inlet Temp	[C]/[F]
1	AI		Outlet Temp	[C]/[F]
2	AI		Not used	
3	AI		DHW Temp	[C]/[F]
4	AI		System Inlet Temp	[C]/[F]
5	AI		System Outlet Temp	[C]/[F]
6	AI		Outdoor Temp	[C]/[F]
7	AI		Aux1 Temp	[C]/[F]
8	AI		Aux2 Temp	[C]/[F]
9	AI		Aux3 Temp	[C]/[F]
10	AI		Aux4 Temp	[C]/[F]
11	AI		Aux5 Temp	[C]/[F]
12	AI		Flame Signal 1	[uA]
13	AI		Flame Signal 2	[uA]
14	AI		Analog Input 1	[mv]
15	AI		Analog Input 2	[mv]
16	AI		Analog Input 3	[mv]
17	AI		Analog Input 4	[mv]
18	AI	b0	Flow Switch	bit
		b1	Low Water Cut Off	bit
		b2	Man Reset High Limit	bit
		b3	Pressure Switch	bit
		b4	High Gas Pressure Switch	bit
		b5	Low Gas Pressure Switch	bit
		b6	Field Interlock Swicth	bit
		b7	Spare Safety Chain Swicth	bit
		b8…b15	Not used	bit
19	AI	b0	Damper Interlock Swicth	bit
		b1	Spare1 Swicth	bit
		b2…b15	Not used	bit
20	AI		Current Demand Source 0 -> No Demand 1 -> Anti Short Cycle 2 -> Service 3 -> DHW 4 -> Slave Cascade 5 -> External 6 -> CH1 7 -> CH2 8 -> CH3 9 -> CH4 10 -> Antifrost	
21	AI	b0	Boiler Run Contact	bit
		b1	Alaram Contact	bit
		b2	DHW Pump	bit
		b3	System Pump	bit
		b4	Louver Contact	bit
		b5	Spare1 Contact	bit
		b6	Spare2 Contact	bit
		b7	Boiler Pump	bit
		b8	Spare Output	bit
		b9…b15	Not used	bit
22	AI	b0	Not used	bit
		b1	Valve 1 Stage 1	bit
		b2	Valve 2 Stage 1	bit
		b3	Not used	bit
		b4	Valve 1 Stage 2	bit
		b5	Valve 2 Stage 2	bit
		b6..b15	Not used	bit
23	AI		Analog Output 1	[mV]
24	AI		Analog Output 2	[mV]
25	AI		Analog Output 3	[mV]
26	AI		Analog Output 4	[mV]
27	AI		Not used	[rpm]
28	AI		Not used	[rpm]
29	AI		Blower 1 Speed 0 -> Off 1 -> Low 2 -> High	
30	AI		Blower 2 Speed 0 -> Off 1 -> Low 2 -> High	

BacNet Address	BacNet Type	Bit	Value	Unit
31	AI		HSI1 Current	[mA]
32	AI		HSI2 Current	[mA]
33	AI		Burner 1 Power Rating	[%]
34	AI		Burner 2 Power Rating	[%]
35	AI		Lockout Code	
36	AI		Blocking Code	
37	AI		Not used	
38	AI		DHW Call For Heat / 10	[cycles * 10]
39	AI		CH1 Call For Heat / 10	[cycles * 10]
40	AI		CH2 Call For Heat / 10	[cycles * 10]
41	AI		Not used	[cycles * 10]
42	AI		Not used	[cycles * 10]
43	AI		Cascade Call For Heat / 10	[cycles * 10]
44	AI		Valve 1 Stage1 Cycles / 10	[cycles * 10]
45	AI		Valve 2 Stage1 Cycles / 10	[cycles * 10]
46	AI		Valve 1 Stage2 Cycles / 10	[cycles * 10]
47	AI		Valve 2 Stage2 Cycles / 10	[cycles * 10]
48	AI		Boiler Pump Cycles / 10	[cycles * 10]
49	AI		DHW Pump Cycles / 10	[cycles * 10]
50	AI		System Pump Cycles / 10	[cycles * 10]
51	AI		Average Outlet Temp	[C]/[F]
52	AI		Max Outlet Temp	[C]/[F]
53	AI		Min Outlet Temp	[C]/[F]
54	AI		Average Firing Time	[h]
55	AI		Max Firing Time	[h]
56	AI		Min Firing Time	[h]
57	AI		Not used	
58	AI		Not used	
59	AI		Not used	
60	AI		Not used	
61	AI		Not used	
62	AI		Not used	
63	AI		Not used	
64	AI		Modulation Sensor 0 -> None 1-> Outlet 2 -> DHW 3 -> System 4 -> Inlet 5 -> Flue 6 -> Sys return	
65	AI		Activate Service	
66	AI		Slave 1 State 0 -> Not Present 1 -> Not Available 2-> Available 3 -> Running 4 -> Locked Out	
67	AI		Slave 1 Firing Rate	
68	AI		Slave 2 State 0 -> Not Present 1 -> Not Available 2-> Available 3 -> Running 4 -> Locked Out	
69	AI		Slave 2 Firing Rate	
70	AI		Slave 3 State 0 -> Not Present 1 -> Not Available 2-> Available 3 -> Running 4 -> Locked Out	
71	AI		Slave 3 Firing Rate	
72	AI		Slave 4 State 0 -> Not Present 1 -> Not Available 2-> Available 3 -> Running 4 -> Locked Out	
73	AI		Slave 4 Firing Rate	
74	AI		Slave 5 State 0 -> Not Present 1 -> Not Available 2-> Available 3 -> Running 4 -> Locked Out	

BacNet Address	BacNet Type	Bit	Value	Unit
75	AI		Slave 5 Firing Rate	
76	AI		Slave 6 State 0 -> Not Present 1 -> Not Available 2-> Available 3 -> Running 4 -> Locked Out	
77	AI		Slave 6 Firing Rate	
78	AI		Slave 7 State 0 -> Not Present 1 -> Not Available 2-> Available 3 -> Running 4 -> Locked Out	
79	AI		Slave 7 Firing Rate	
80	AI		Master State 0 -> Not Present 1 -> Not Available 2-> Available 3 -> Running 4 -> Locked Out	
81	AI		Master Firing Rate	
82	AI		Not used	
83	AI		Active CH Setpoint	
84	AI		Burner 1 Status	
85	AI		Burner 2 Status	
86	AI		Not used	
87	AI		Not used	
88	AI		Not used	
89	AI		Boiler Pump Status	
90	AI		Master Demand	
91	AI		Burner 1 Run Time	[h]
92	AI		Burner 2 Run Time	[h]
			Not used	
			Not used	
0	AV		CH1 Enable/Disable	
1	AV		CH1 Setpoint	[C]/[F]
2	AV		CH1 P	
3	AV		CH1 I	
4	AV		CH1 D	
5	AV		CH2 Enable/Disable	
6	AV		CH2 Setpoint	[C]/[F]
7	AV		CH2 P	
8	AV		CH2 I	
9	AV		CH2 D	
10	AV		Not used	
11	AV		Not used	[C]/[F]
12	AV		Not used	
13	AV		Not used	
14	AV		Not used	
15	AV		Not used	
16	AV		Not used	[C]/[F]
17	AV		Not used	
18	AV		Not used	
19	AV		Not used	
20	AV		DHW Enable/Disable	
21	AV		DHW Setpoint	[C]/[F]
22	AV		DHW P	
23	AV		DHW I	
24	AV		DHW D	
25	AV		Not used	
26	AV		Not used	[C]/[F]
27	AV		Cascade Setpoint	[C]/[F]
28	AV		Cascade P	
29	AV		Cascade I	
30	AV		Cascade D	
31	AV		Not used	
32	AV		Not used	
33	AV		Not used	
34	AV		Not used	
35	AV		Hybrid Setpoint	[C]/[F]
36	AV		Hybrid Differential Temp	[C]/[F]
37	AV		Not used	
38	AV		Not used	
39	AV		Not used	

BacNet Address	BacNet Type	Bit	Value	Unit
40	AV		Not used	[C]/[F]
41	AV		AntiCondens Enable	
42	AV		AntiCondens Temp	[C]/[F]
43	AV		AntiCondens P	
44	AV		AntiCondens I	
45	AV		AntiCondens D	
0	BV		DHW demand	
1	BV		CH1 demand	
2	BV		CH2 demand	
3	BV		Not used	
4	BV		Not used	

SECTION 11 Replacement Parts

Only genuine manufacturer's replacement parts should be used.

11.A General Information

To order or purchase parts, contact your nearest Pentair dealer or distributor. If they cannot supply you with what you need, contact Customer Service (see back cover for address and telephone numbers).

11.B Parts List

Item	Description	Size 500	Size 750	Size 1000	Size 1250	Size 1500	Size 1750	Size 2000
	Sheet Metal Components							
	See Figure 25 on page 68							
1	Panel, Jacket, Side Left	5C3420	5C3420	5C3420	5C3420	5C3420	5C3420	5C3420
2	Panel, Jacket, Side Right	5C3521	5C3521	5C3521	5C3521	5C3521	5C3521	5C3521
3	Panel, Jacket, Front	5C3320	7C3320	10C3320	12C3320			
3	Panel, Jacket, Front, Left					15C3320	17C3320	20C3320
4	Panel, Jacket, Front, Right					15C3320	17C3320	20C3320
5	Panel, Jacket, Rear	5C3220	7C3220	10C3220	12C3220	15C3220	17C3220	20C3220
5A	Panel, Jacket, Rear, Filter Enclosure					15C3026	15C3026	15C3026
6	Panel, Jacket, Top	5C3021	7C3021	10C3021	12C3021			
	Panel, Jacket, Top, Left					15C3021	17C3021	20C3021
7	Panel, Jacket, Top Right					15C3025	17C3025	20C3025
8	Alcove Assembly (touchscreen and panel)	5C723200	5C723200	5C723200	5C723200	5C723200	5C723200	5C723200
8A	Touchscreen	RE2404900	RE2404900	RE2404900	RE2404900	RE2404900	RE2404900	RE2404900
9	Plate, Gas Pipe Seal	5C3304 (2)	5C3304 (2)	10C3304 (2)	20C3304 (2)	20C3304 (2)	20C3304 (2)	20C3304 (2)
10	Plate, Cover, Wiring	5C3502	5C3502	5C3502	5C3502	5C3502	5C3502	5C3502
11	Plate, Vent	5C3004	5C3004	10C3004	20C3004	20C3004	20C3004	20C3004
12	Cover, Vent Plate				20C3006	20C3006	20C3006	20C3006
13	Plate, Cover, Filter	5C3002	5C3002	5C3002	20C3002	20C3002	20C3002	20C3002
14	Collar, Vent	5C3106	10C3100	10C3100	15C3100	15C3100	20C3100	20C3100
16	Air Filter	R2014700 (1)	R2014700 (1)	R2014700 (1)	R2014700 (2)	R2014700 (2)	R2014700 (2)	R2014700 (2)
16A	Trim, Jacket, Front	5C3019	7C3019	10C3019	12C3019	15C3019	17C3019	20C3019
16B	Pump Housing Right Side	5C3018	5C3018	5C3018	5C3018	5C3018	5C3018	5C3018
16C	Pump Housing Left Side	5C3019	5C3019	5C3019	5C3019	5C3019	5C3019	5C3019
16D	Pump Housing Cover	5C3020	5C3020	5C3020	5C3020	5C3020	5C3020	5C3020

Item	Description	Size 500	Size 750	Size 1000	Size 1250	Size 1500	Size 1750	Size 2000
	Internal Components							
	See Figure 26 on page 69							
17	Base Assembly	5C1020	7C1020	10C1020	12C1020	15C1020	17C1020	20C1020
18	Chamber, Front	5C2003	7C2003	10C2003	12C2003	15C2003	17C2003	20C2003
18A	Chamber, Left Side, Front	5C2015	5C2015	5C2015	5C2015	5C2015	5C2015	5C2015
18B	Chamber, Right Side, Front	5C2016	5C2016	5C2016	5C2016	5C2016	5C2016	5C2016
19	Chamber, Rear	5C2006	7C2006	10C2006	12C2006	15C2006	17C2006	20C2006
20	Chamber Assembly, Left, Bottom	5C2602	5C2602	5C2602	5C2602	5C2602	5C2602	5C2602
21	Chamber Assembly, Right, Bottom	5C2200	5C2200	5C2200	5C2200	5C2200	5C2200	5C2200
22	Chamber, Top	5C2001	7C2001	10C2001	12C2001	15C2001	17C2001	20C2001
23	Chamber, Side, Top	5C2002	5C2002	5C2002	5C2002	5C2002	5C2002	5C2002
24	Exhaust Plenum	5C2007	10C2007	10C2007	20C2007	20C2007	20C2007	20C2007
25	Bracket, Chamber, Front	5C2009	7C2009	10C2009				
	Bracket, Chamber, Front Left				12C2011	15C2011	17C2011	20C2011
26	Bracket, Chamber, Front Right				12C2009	15C2009	17C2009	20C2009
27	Divider, Chamber, Front						15C2010	20C2002
27A	Divider, Upper, Chamber, Front				15C2005	15C2005		
27B	Divider, Lower, Chamber, Front				15C2002	15C2002		
28	Cover, Chamber	5C2004	7C2004					
	Cover, Chamber, Front Left			10C2004	12C2010	15C2004	17C2010	20C2010
29	Door, Chamber Access	5C2005 (1)	5C2005 (1)	5C2005 (1)	5C2005 (2)	5C2005 (2)	5C2005 (2)	5C2005 (2)
30	Cover, Chamber, Front Right			10C2010	12C2008	15C2004	17C2008	20C2008
32	Ignitor, Hot Surface, with Gasket	2400-286 (1)	2400-286 (1)	2400-286 (2)	2400-286 (2)	2400-286 (2)	2400-286 (2)	2400-286 (2)
33	Tile, Side (Right and Left)	T2015600 (2)	T2015600 (2)	T2015600 (2)	T2015600 (2)	T2015600 (2)	T2015600 (2)	T2015600 (2)
34	Tile, Front	T2017300 (1)						
35	Tile, Front, Left Side		T2016200 (1)	T2016800 (1)	T2016800 (1)	T2016800 (1)	T2016800 (1)	T2016800 (1)
35A	Tile, Front, Right Side		T2016300 (1)	T2017100 (1)	T2017900 (1)	T2017100 (1)	T2017900 (1)	T2017100 (1)
35B	Tile, Front, Center				T2016900	T2016900	T2016900	T2016900

Item	Description	Size 500	Size 750	Size 1000	Size 1250	Size 1500	Size 1750	Size 2000
					(1)	(1)	(2)	(2)
36	Tile, Rear	T2015700 (1)						
37	Tile, Rear, Left Side		T2017500 (1)	T2016600 (1)	T2016600 (1)	T2016600 (1)	T2016600 (1)	T2016600 (1)
37A	Tile, Rear, Right Side		T2016600 (1)	T2016600 (1)	T2018100 (1)	T2016600 (1)	T2018100 (1)	T2016600 (1)
37B	Tile, Rear, Center				T2017200 (1)	T2017200 (1)	T2017200 (2)	T2017200 (2)
38	Tile, Bottom	T2015500 (1)						
39	Tile, Bottom, Left Side		T2017400 (1)	T2017400 (1)	T2017400 (1)	T2017400 (1)	T2017400 (1)	T2017400 (1)
39A	Tile, Bottom, Right Side		T2016500 (1)	T2017400 (1)	T2018000 (1)	T2017400 (1)	T2018000 (1)	T2017400 (1)
39B	Tile, Bottom, Center				T2015900 (1)	T2015900 (1)	T2015900 (2)	T2015900 (2)
	Heat Exchanger Components							
	See Figure 27 on page 70							
41	Heat Exchanger, Copper	R2014901	R2014902	R2014903	R2026701	R2014904	R2026702	R2014905
	Heat Exchanger, Cupro-Nickel	R2027801	R2027802	R2027803	R2027804	R2027805	R2027806	R2027807
42	Water Barrier, Inlet/outlet	20305101	20305101	20305101	20305101	20305101	20305101	20305101
43	Water Barrier, Inlet	10338300	10338300	10338300	10338300	10338300	10338300	10338300
44	Gasket, Header	S0095100 (2)	S0095100 (2)	S0095100 (2)	S0095100 (2)	S0095100 (2)	S0095100 (2)	S0095100 (2)
45	Cover, In/Out, Glass-Lined Cast Iron	10364504	10364504	10364504	10364504	10364504	10364504	10364504
	Cover, In/Out, Bronze	10364501	10364501	10364501	10364501	10364501	10364501	10364501
46	Well, Temperature Control	RE2058300	RE2058300	RE2058300	RE2058300	RE2058300	RE2058300	RE2058300
47	Gasket, Flange	S0063700 (2)	S0063700 (2)	S0063700 (2)	S0063700 (2)	S0063700 (2)	S0063700 (2)	S0063700 (2)
48	Flange, Cast Iron	10391302	10391302	10391302	10391302	10391302	10391302	10391302
	Flange, Bronze	20255401	20255401	20255401	20255401	20255401	20255401	20255401
49	Relief Valve, Boiler, 75 PSI	RA2138800	RA2138800	RA2138801	RA2138801	RA2138802	RA2138802	RA2138802

Item	Description	Size 500	Size 750	Size 1000	Size 1250	Size 1500	Size 1750	Size 2000
	Relief Valve, Water heater, 125 PSI	RA2138900	RA2138900	RA2138900	RA2138900	RA2138900	RA2138900	RA2138900
50	Tee, Adapter, Outlet, Cast Iron	20130001	20130001	20130001	20130001	20130010	20130010	20130010
	Tee, Adapter, Outlet, Bronze	S2115501	S2115501	S2115501	S2115501	S2115506	S2115506	S2115506
51	Flow Switch	RE0013000	RE0013000	RE0013000	RE0013000	RE0013000	RE0013000	RE0013000
52	Gauge, Temperature/Pressure	RA0079000	RA0079000	RA0079000	RA0079000	RA0079000	RA0079000	RA0079000
54	Low Water Cutoff	R0021901	R0021901	R0021901	R0021901	R0021901	R0021901	R0021901
55	Pump Housing, Glass-lined, Cast Iron	R20607600	R20607600	R20607600	R20607600	R20607600	R20607600	R20607600
	Pump Housing, Bronze	10483300	10483300	10483300	10483300	10483300	10483300	10483300
56	Gasket, Pump Adapter	S0024600	S0024600	S0024600	S0024600	S0024600	S0024600	S0024600
57	Pump Adapter, Glass-lined Cast Iron	10364200	10364200	10364200	10364200	10364200	10364200	10364200
	Pump Adapter, Bronze	10364201	10364201	10364201	10364201	10364201	10364201	10364201
58	Baffle, Diffuser, Pump Inlet	10338400	10338400	10338400	10338400	10338400	10338400	10338400
59	Pressure Switch	RE0240900 (2)	RE0240900 (2)	RE0240900 (2)	RE0240900 (3)	RE0240900 (3)	RE0240900 (3)	RE0240900 (3)
60	Blower	A2111900 (1)	A2111900 (1)	A2111900 (1)	A2111900 (2)	A2111900 (2)	A2111900 (2)	A2111900 (2)
61	Weldment, Blower Mount	5C5300 (1)	5C5300 (1)	5C5300 (1)	5C5300 (2)	5C5300 (2)	5C5300 (2)	5C5300 (2)
62	Damper, Duct Assembly, Blower				15C5400 (2)	15C5400 (2)	15C5400 (2)	15C5400 (2)
	Electrical Components							
	See Figure 28 on page 71							
64	Bracket, Base Controls	5C7205	5C7205	5C7205	5C7205	5C7205	5C7205	5C7205
65	Bracket, Terminal Strip, Controls	5C7204	5C7204	5C7204	5C7204	5C7204	5C7204	5C7204
66	Bracket, PCB Mounting, Controls	5C7209	5C7209	5C7209	5C7209	5C7209	5C7209	5C7209
67	Bracket, Mounting, Safety	5C7112	5C7112	5C7112	5C7112	5C7112	5C7112	5C7112
68	Board, Control, Commercial	R2079300	R2079300	R2079300	R2079300	R2079300	R2079300	R2079300
69	High Limit, Auto Reset, Boiler	RE0014400	RE0014400	RE0014400	RE0014400	RE0014400	RE0014400	RE0014400
	High Limit, Auto Reset, heater, 210F Max	E2217700	E2217700	E2217700	E2217700	E2217700	E2217700	E2217700
70	High Limit, Manual Reset, Boiler	RE0015900	RE0015900	RE0015900	RE0015900	RE0015900	RE0015900	RE0015900
	High Limit, Manual Reset, Heater, 210F Max	E2217800	E2217800	E2217800	E2217800	E2217800	E2217800	E2217800
71	Relay, Pump (SPST)	E2367900	E2367900	E2367900	E2367900	E2367900	E2367900	E2367900

Item	Description	Model 500	Model 750	Model 1000	Model 1250	Model 1500	Model 1750	Model 2000
72	Terminal Bus (12 Position)	E2342600	E2342600	E2342600	E2342600	E2342600	E2342600	E2342600
73	Transformer	E2310400	E2310400	E2310400	E2318800 (x2)	E2318800 (x2)	E2318800 (x2)	E2318800 (x2)
74	Circuit Breaker	E2106200	E2106200	E2106200	E2318800	E2318800	E2318900	E2318900
75	Switch, Rocker (main power) *not shown*	E2343300	E2343300	E2343300	E2343300	E2343300	E2343300	E2343300
	Gas Train Components							
	See Figure 26 on page 69							
76	Manifold, Gas Supply	5C6700	7C6700	10C6700	12C6700	15C6700	17C6700	20C6700
77	Valve, Ball	V2003100	V2003100	V2003200	V2003300	V2003300	V2003300	V2003300
	Burner Trays							
	Note: Burner Manifold Assemblies contain item numbers 78 through 81.							
	Burner Manifold Assy, 3 Burners, Right, Nat	5C6600 (1)	5C6600 (1)		5C6600 (2)	5C6600 (1)	5C6600 (1)	
	Burner Manifold Assy, 3 Burners, Left, Nat	5C6500 (1)	5C6500 (2)		5C6500 (3)	5C6500 (1)	5C6500 (2)	
	Burner Manifold Assy, 4 Burners, Right, Nat			10C6600 (1)		10C6600 (1)	10C6600 (1)	10C6600 (2)
	Burner Manifold Assy, 4 Burners, Left, Nat			10C6500 (2)		10C6500 (2)	10C6500 (2)	10C6500 (4)
	Burner Manifold Assy, 3 Burners, Right, LP	5C6620 (1)	5C6620 (1)		5C6620 (2)	5C6620 (1)	5C6600 (1)	
	Burner Manifold Assy, 3 Burners, Left, LP	5C6520 (1)	5C6520 (1)		5C6520 (3)	5C6520 (1)	5C6500 (2)	
	Burner Manifold Assy, 4 Burners, Right, LP			10C6620 (1)		10C6620 (1)	10C6620 (1)	10C6620 (2)
	Burner Manifold Assy, 4 Burners, Left, LP			10C6520 (2)		10C6500 (2)	10C6520 (2)	10C6520 (4)
78	Valve, Gas, Combination	V2017600 (2)	V2017600 (3)	V2017600 (3)	V2017600 (5)	V2017600 (5)	V2017600 (6)	V2017600 (6)
79	Valve, Manual Shutoff	V2000200 (2)	V2000200 (3)	V2000200 (3)	V2000200 (5)	V2000200 (5)	V2000200 (6)	V2000200 (6)
80	Orifice, Gas, Natural	L2013000 (6)	L2013000 (9)	L2013000 (12)	L2013000 (15)	L2013000 (18)	L2013000 (21)	L2013000 (24)

Item	Description	Model 500	Model 750	Model 1000	Model 1250	Model 1500	Model 1750	Model 2000
	Orifice, Gas, Propane	L2012400 (6)	L2012400 (9)	L2012400 (12)	L2012400 (15)	L2012400 (18)	L2012400 (21)	L2012400 (24)
81	Burner Manifold, 3 Burners, Right	L2012900 (1)	L2012900 (1)		L2012900 (2)	L2012900 (1)	L2012900 (1)	
	Burner Manifold, 3 Burners, Left	L2012800 (1)	L2012800 (1)		L2012800 (3)	L2012800 (1)	L2012800 (2)	
	Burner Manifold, 4 Burners, Right			L2012700 (1)		L2012700 (1)	L2012700 (1)	L2012700 (2)
	Burner Manifold, 4 Burners, Left			L2012600 (2)		L2012600 (2)	L2012600 (2)	L2012600 (4)
82	Burner Tray, 3 Burners	L2012200 (2)	L2012200 (3)		L2012200 (5)	L2012200 (2)	L20122000 (3)	
	Burner Tray, 4 Burners			L2012500 (3)		L2012500 (3)	L2012500 (3)	L2012500 (6)
82A	Gasket, Burner Tray, 3 Burner	S2012700 (2)	S2012700 (3)		S2012700 (5)	S2012700 (2)	S2012700 (3)	
	Gasket, Burner Tray, 4 Burner			S2012500 (3)		S2012500 (3)	S2012500 (3)	S2012500 (6)
83	Kit, Diverting Valve	R2027400	R2027400	R2027400	R2027400	R2027400	R2027400	R2027400
84	Actuator, Valve	R2027500	R2027500	R2027500	R2027500	R2027500	R2027500	R2027500
	Tapes (Not Shown in Parts Diagrams)							
	Gasket Tape, RR, Base (43')	R2014500	R2014500	R2014500	R2014500	R2014500	R2014500	R2014500
	Gasket Tape, Ft Air Chamber (63')	R2014600	R2014600	R2014600	R2014600	R2014600	R2014600	R2014600
	Sensors (Not Shown in Parts Diagrams)							
	Inlet Sensor	E2103300	E2103300	E2103300	E2103300	E2103300	E2103300	E2103300
	Inlet Immersion Well	E2058300	E2058300	E2058300	E2058300	E2058300	E2058300	E2058300
	Outlet Sensor	E2366900	E2366900	E2366900	E2366900	E2366900	E2366900	E2366900
	Outlet Immersion Well	E2366700	E2366700	E2366700	E2366700	E2366700	E2366700	E2366700
	DHW Sensor	N/A	N/A	N/A	N/A	N/A	N/A	N/A
	System Supply Sensor	E2366900	E2366900	E2366900	E2366900	E2366900	E2366900	E2366900
	System Return Sensor	E2103300	E2103300	E2103300	E2103300	E2103300	E2103300	E2103300

11.C Parts Illustrations

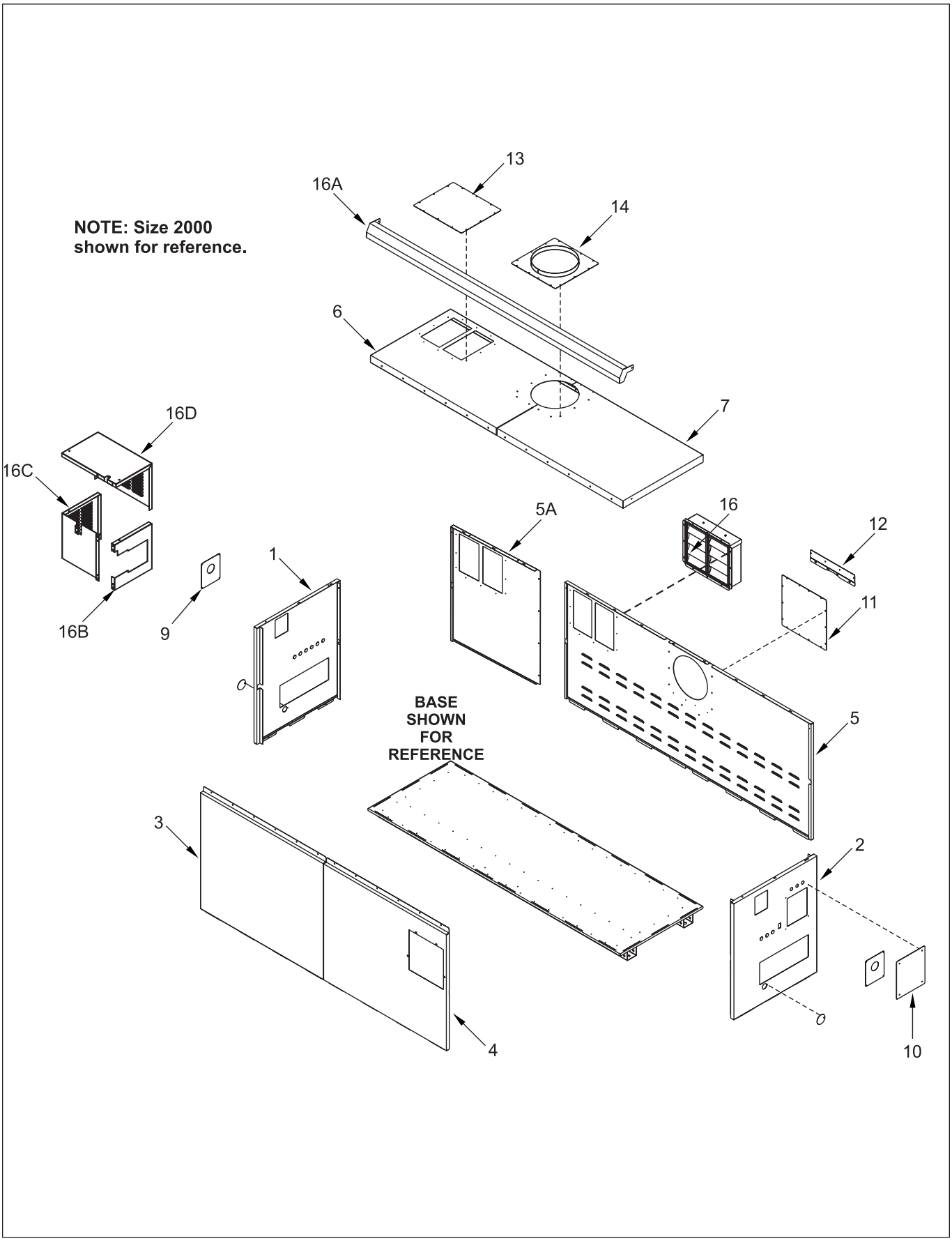

Figure 25. Sheet Metal Components.

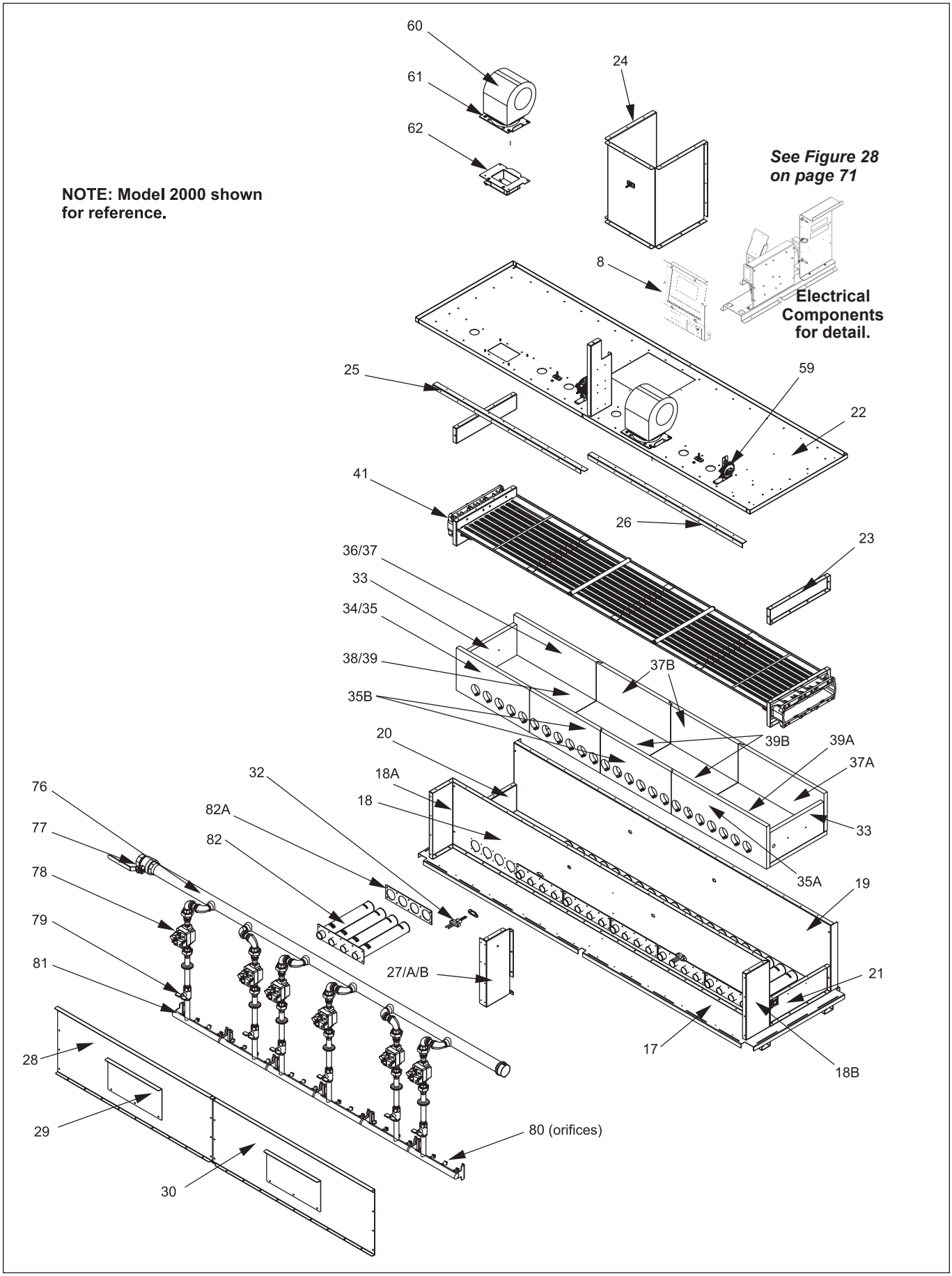

Figure 26. Internal Components.

See pump chart below
for pump numbers.

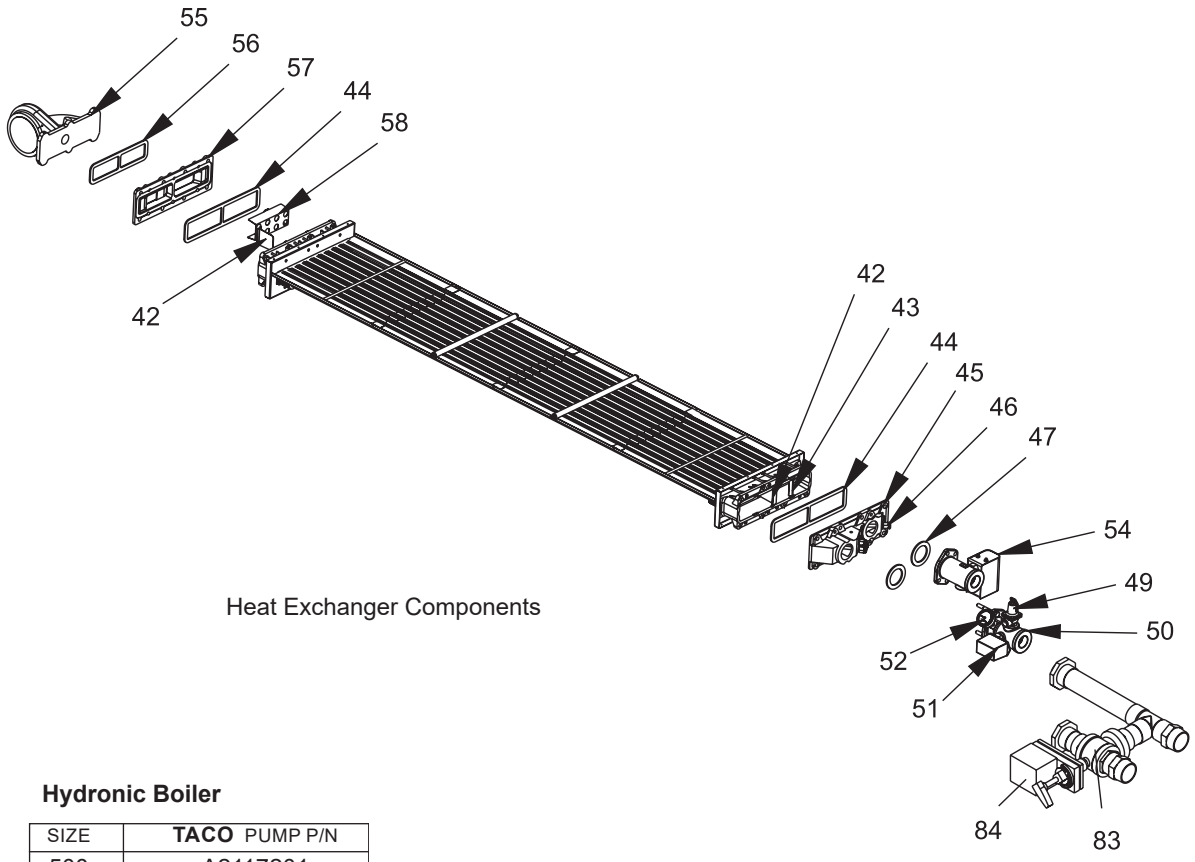

Heat Exchanger Components

Hydronic Boiler

SIZE	**TACO** PUMP P/N
500	A2117201
750	A2117201
1000	A2117202
1250	A2117202
1500	A2117203
1750	A2117203
2000	A2117204

Water Heater with TACO Pump

	TACO PUMP P/N		
SIZE	Soft Water	Normal Water	Hard Water
500	A2117201	A2117201	A2117203
750	A2117201	A2117201	A2117203
1000	A2117201	A2117202	A2117203
1250	A2117201	A2117202	A2117203
1500	A2117201	A2117203	A2117203
1750	A2117203	A2117203	A2117203
2000	A2117204	A2117204	A2117204

Figure 27. Heat Exchanger Components.

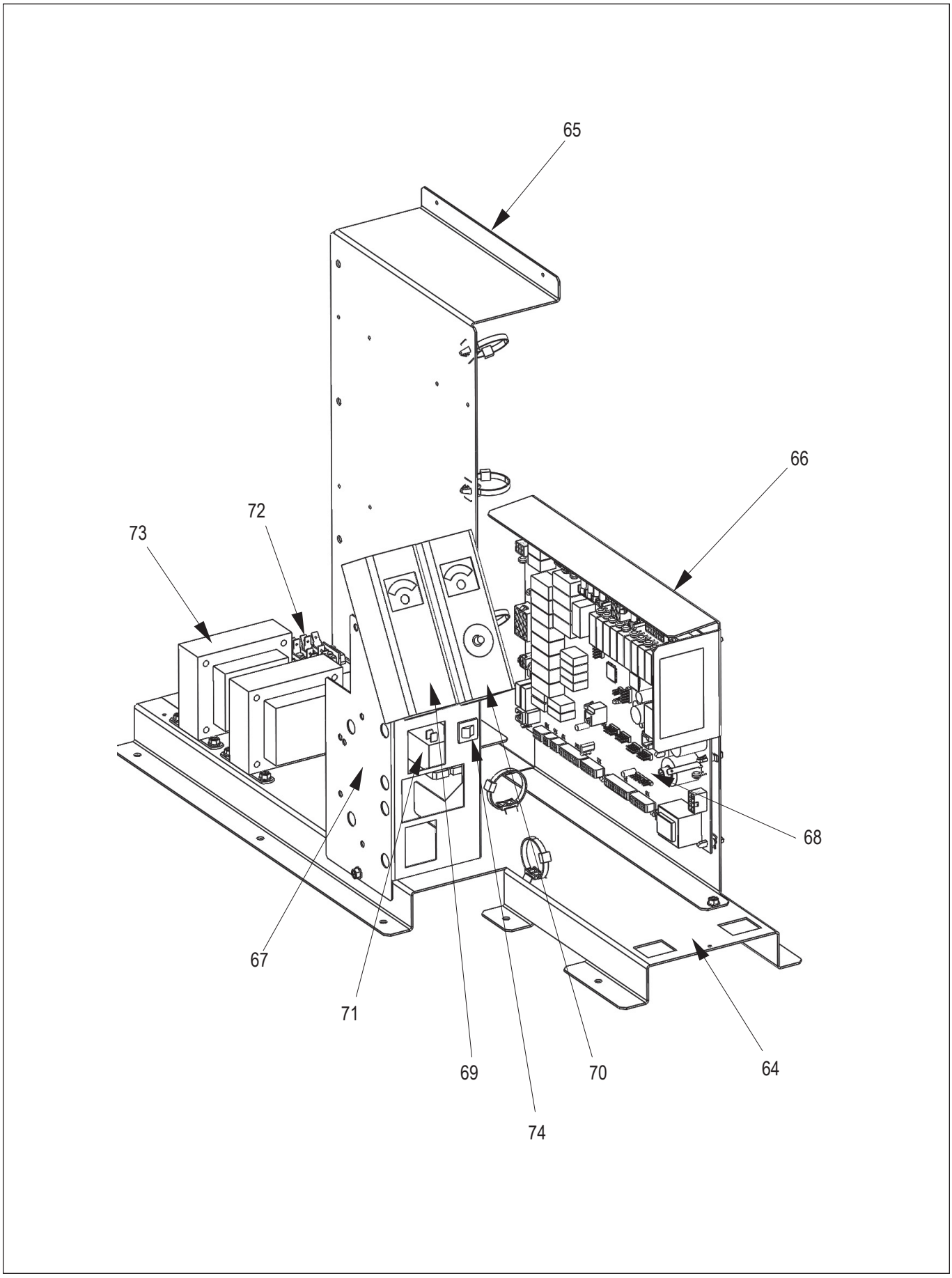

Figure 28. Electrical Components.

1620 HAWKINS AVE., SANFORD, NC 27330 · (919) 566-8000
10951 WEST LOS ANGELES AVE., MOORPARK, CA 93021 · (805) 553-5000

All indicated Pentair trademarks and logos are property of Pentair.
Third party registered and unregistered trademarks and logos are the property of their respective owners.

© 2023 Pentair. All rights reserved. WWW.PENTAIR.COM

Dimensions and specifications subject to change without notice in accordance with our policy of continuous product improvement.

H2380300D

P/N 472642 Rev. D **03/03/23**

23-03 Document 3180D