175 PSI WWP Iron Body Check Valves

Fire Protection Valve • Bolted Bonnet • Horizontal Swing • Renewable Seat and Disc • Drilled and Tapped for Ball Drip Outlet

175 PSI/12.1 Bar Non-Shock Cold Water

CONFORMS TO MSS SP-71 • UL/ULC LISTED* • FM APPROVED • APPROVED BY THE NEW YORK CITY B.S.A. 143-69-SA

c UL US LISTED
FM APPROVED



F-908-W
Flanged

PRODESEG S.A. DISTRIBUIDOR AUTORIZADO
www.prodeseg.com.co

MATERIAL LIST

	PART	SPECIFICATION
1.	Pipe Plug	Cast Iron or Steel
2.	Bonnet	Cast Iron ASTM A126 Class B
3.	Bonnet Gasket	Non Asbestos
4.	Bonnet Bolt and Nut	Steel ASTM A307
5.	Hinge Plug	Cast Bronze B584 Alloy C84400 (not shown)
6.	Hinge Pin	Brass ASTM B16
7.	Disc Hanger Nut	Cast Bronze B584 Alloy C84400
8.	Disc Stud Bolt	Brass ASTM B16 Alloy C36000
9.	Disc Cage	Cast Iron ASTM A126 Class B or Malleable Iron ASTM A 47 (not shown)
10.	Disc Plate	Cast Bronze B584 Alloy C84400
11.	Disc Hanger	Cast Bronze B584 Alloy C84400
12.	Disc Nut	Brass ASTM B16 Alloy C36000
13.	Seat Ring	Cast Bronze B584 Alloy C84400
14.	Disc	Rubber (W)
15.	Body	Cast Iron ASTM A126 Class B

NOTE: Sizes 2½, 3, 5, & 10 are manufactured, listed and approved by Kennedy Valve and distributed by NIBCO.
Material list applies to sizes 4", 6", 8", 12" only.
All sizes are drilled and tapped ¾" at Boss "C" for ball drip.

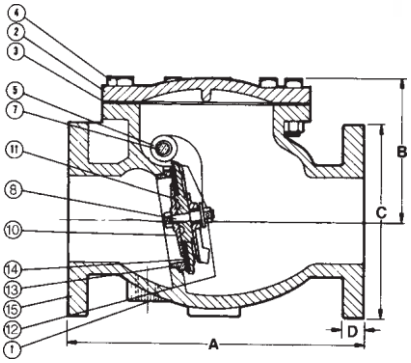

F-908-W
Flg x Flg

DIMENSIONS—WEIGHTS—QUANTITIES

Size		Dimensions A		B		C		D		Weight	
In.	mm.	In.	mm.	In.	mm.	In.	mm.	In.	mm.	Lbs.	Kg.
2½	65	10.00	254	6.44	164	7.00	178	.69	17	53	24
3	80	10.25	260	6.63	168	7.50	191	.75	19	62	28
4	100	13.00	330	8.00	203	9.00	229	.94	24	103	47
5	125	15.00	381	9.19	233	10.00	254	1.00	25	145	66
6	150	16.25	413	10.31	262	11.00	279	1.00	25	174	79
8	200	19.50	495	11.50	292	13.50	343	1.13	29	290	132
10	250	22.00	559	13.31	338	16.00	406	1.19	30	490	223
12	300	27.50	699	15.56	395	19.00	483	1.25	32	683	310

NIBCO Iron Body check valves may be installed in both horizontal and vertical lines with upward flow.

*** Compliance with the Canadian Requirements per ULC Subject 312 and the Standard for Check Valves, UL 312.**

⚠ **WARNING:** This product can expose you to chemicals including lead, which is known to the State of California to cause cancer and birth defects or other reproductive harm. For more information go to www.P65Warnings.ca.gov.



Ball Drip

An automatic ball drip is available for NIBCO Underwriter's check valves. The ball drip is installed at boss location "C" on the check valve of the fire department connection. It will close against pressure, but will open when pressure is off allowing water to drain from the fire department connection.

¾" Ball Drip #RG 22100
90° Street Elbow #1046227 PP

Visit our website for the most current information.

NIBCO INC. WORLD HEADQUARTERS • 1516 MIDDLEBURY ST. • ELKHART, IN 46516-4740 • USA • PH: 1.800.234.0227
TECH SERVICES PH: 1.888.446.4226 • FAX: 1.888.336.4226 • INTERNATIONAL OFFICE PH: +1.574.295.3327 • FAX: +1.574.295.3455
www.nibco.com